Compal Confidential

VIWZ1/VIWZ2 DIS M/B Schematics Document

Intel Ivy Bridge Processor with DDRIII + Panther Point PCH

nVIDIA N14P-GV2

2012-12-26

LA-9063P

REV:1.0

Security Classification	Compal Secret Data			Compal Electronics, Inc.
Issued Date	2012/12/26	Deciphered Date	2012/07/11	Title: Cover Page
THIS SHEET OF ENGINEERING DRAWING IS THE PROPRIETARY PROPERTY OF COMPAL ELECTRONICS, INC. AND CONTAINS CONFIDENTIAL AND TRADE SECRET INFORMATION. THIS SHEET MAY NOT BE TRANSFERED FROM THE CUSTODY OF THE COMPETENT DIVISION OF R&D DEPARTMENT EXCEPT AS AUTHORIZED BY COMPAL ELECTRONICS, INC. NEITHER THIS SHEET NOR THE INFORMATION IT CONTAINS MAY BE USED BY OR DISCLOSED TO ANY THIRD PARTY WITHOUT PRIOR WRITTEN CONSENT OF COMPAL ELECTRONICS, INC.				Size: Custom; Document Number: LA-9603P; Rev: 1.0
				Date: Wednesday, January 09, 2013; Sheet 1 of 62

WWW.AliSaler.Com

Compal confidential
File Name : VIWZ1/VIWZ2

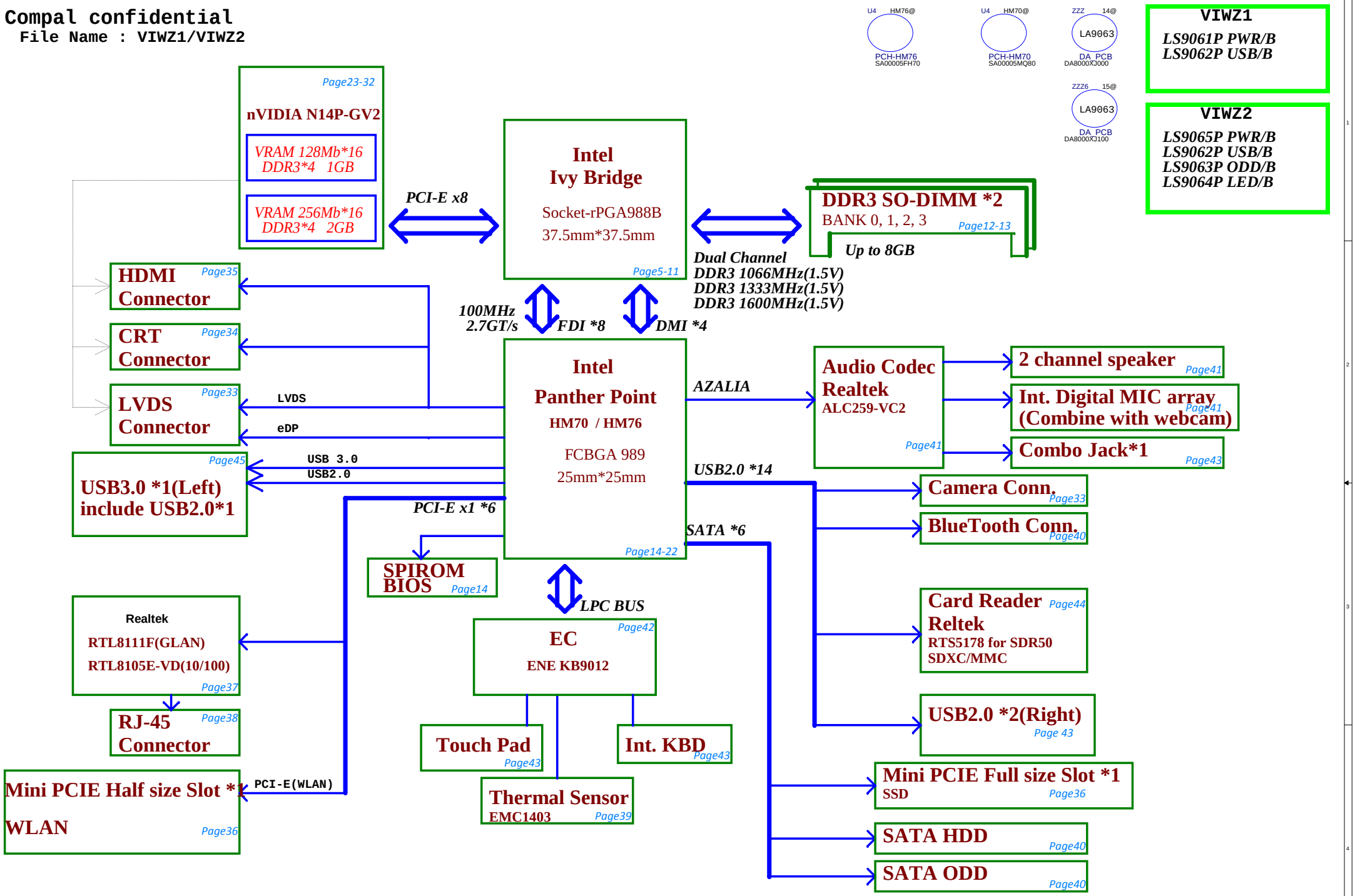

Security Classification	Compal Secret Data		
Issued Date	2012/12/26	Deciphered Date	2012/07/11

THIS SHEET OF ENGINEERING DRAWING IS THE PROPRIETARY PROPERTY OF COMPAL ELECTRONICS, INC. AND CONTAINS CONFIDENTIAL AND TRADE SECRET INFORMATION. THIS SHEET MAY NOT BE TRANSFERED FROM THE CUSTODY OF THE COMPETENT DIVISION OF R&D DEPARTMENT EXCEPT AS AUTHORIZED BY COMPAL ELECTRONICS, INC. NEITHER THIS SHEET NOR THE INFORMATION IT CONTAINS MAY BE USED BY OR DISCLOSED TO ANY THIRD PARTY WITHOUT PRIOR WRITTEN CONSENT OF COMPAL ELECTRONICS, INC.

Compal Electronics, Inc.

Title: Block Diagram

Size: Custom | Document Number: LA-9603P | Rev: 1.0

Date: Wednesday, January 09, 2013 | Sheet 2 of 62

WWW.AliSaler.Com

Voltage Rails

State \ power plane	+B	+5VALW +3VALW	+1.5V	+5VS +3VS +1.5VS +V1.05S_VCCP +VCC_CORE +VGA_CORE +VCC_GFXCORE_AXG +1.8VS +0.75VS +1.05VS
S0	O	O	O	O
S3	O	O	O	X
S5 S4/AC	O	O	X	X
S5 S4/ Battery only	O	X	X	X
S5 S4/AC & Battery don't exist	X	X	X	X

STATE \ SIGNAL	SLP_S1#	SLP_S3#	SLP_S4#	SLP_S5#	+VALW	+V	+VS	Clock
Full ON	HIGH	HIGH	HIGH	HIGH	ON	ON	ON	ON
S1(Power On Suspend)	LOW	HIGH	HIGH	HIGH	ON	ON	ON	LOW
S3 (Suspend to RAM)	LOW	LOW	HIGH	HIGH	ON	ON	OFF	OFF
S4 (Suspend to Disk)	LOW	LOW	LOW	HIGH	ON	OFF	OFF	OFF
S5 (Soft OFF)	LOW	LOW	LOW	LOW	ON	OFF	OFF	OFF

BOARD ID Table

Board ID	PCB Revision
0	LA-9061P 1.0
1	LA-9061P 0.3
2	LA-9061P 0.2
3	LA-9061P 0.1
4	LA-9063P 0.2
5	LA-9063P 0.2 15_TS
6	
7	

Board ID / SKU ID Table for AD channel

Vcc	3.3V +/- 5%
Ra/Rc/Re	100K +/- 5%

Board ID	Rb / Rd / Rf	V_{AD_BID} min	V_{AD_BID} typ	V_{AD_BID} max	Porject	Phase
0	0	0 V	0 V	0 V	Z-series	MP
1	8.2K +/- 5%	0.216 V	0.250 V	0.289 V	Z-series	PVT
2	18K +/- 5%	0.436 V	0.503 V	0.538 V	Z-series	DVT
3	33K +/- 5%	0.712 V	0.819 V	0.875 V	Z-series	EVT
4	56K +/- 5%	1.036 V	1.185 V	1.264 V	Re-flash	EVT
5	100K +/- 5%	1.453 V	1.650 V	1.759 V	Reserved	DVT
6	200K +/- 5%	1.935 V	2.200 V	2.341 V	Reserved	PVT
7	NC	2.500 V	3.300 V	3.300 V	Reserved	MP

EC SM Bus1 address

Device	Address
Smart Battery	0001 011X b
USB Charger	1010 111X b

EC SM Bus2 address

Device	Address
Thermal Sensor EMC1403	1001_101xb

PCH SM Bus address

Device	Address
DDR DIMM0	1001 000Xb
DDR DIMM2	1001 010Xb

NV-GPU SM Bus address

Device	Address
Internal thermal sensor	1001 111Xb (0x9E)

USB Port Table

	USB 2.0	Port	3 External USB Port
EHCI1 USB3.0	UHCI0	0	USB Port (Left Side) USB3.0
		1	Touch Screen
	UHCI1	2	Blue Tooth
		3	Camera
EHCI1	UHCI2	4	
		5	
	UHCI3	6	
		7	
EHCI2	UHCI4	8	USB Port (Right Side USB-BD)
		9	USB Port (Right Side USB-BD)
	UHCI5	10	Mini Card(WLAN)
		11	Card Reader
	UHCI6	12	
		13	

BOM Structure Table

BTO Item	BOM Structure
GPU:N14P-GV2	GV2@
OPTIMUS part	OPT@
integrate Graphic part	UMA@
GPU:N14P-GV2 Strap	GV2@
GPU:N14P-GV2 GC6 function	GC6@
OPTIMUS no support GCLK	OPTNOGCLK@
OPTIMUS support GCLK	OPTGCLK@
Support Green CLK	GCLK@
not Support Green CLK	NOGCLK@
Support Green CLK 244	GCLK244@
Support Green CLK 304	GCLK304@
Cardreader	CR@
Support HP Woofer	woofer@
Gastube	Gastube@
EC RESET function	RESET@
HDMI	HDMI@
BlueTooth	BT@
Connector	ME@
45 LEVEL	45@
10/100 LAN	8105@
GIGA LAN	GIGA@
Deep Sleep S3	DS3@
Not Support Deep Sleep S3	NODS3@
ISCT	AOAC@
ISCT not support	NOAOAC@
Camera	CMOS@
For Z490 (14")	14@
For Z590 (15")	15@
Unpop	@
USB Charger	CHG@
not USBCharger	NOCHG@
Keyboard Back Light	KBL@
Touch Screen	TS@
HM76 by PCH	HM76@
HM70 by PCH	HM70@
Cardreader RTS5178	RTS5178@
Cardreader RTS5170	RTS5170@
for 14" Touch Screen	TS_14@
for 15" Touch Screen	TS_15@

SMBUS Control Table

	SOURCE	VGA	BATT	KB9012	SODIMM	WLAN WWAN	Thermal Sensor	PCH	TP
SMB_EC_CK1 SMB_EC_DA1	KB9012 +3VALW	X	V +3VALW	X	X	X	X	X	X
SMB_EC_CK2 SMB_EC_DA2	KB9012 +3VALW	X	X	X	X	X	X	V +3VS	X
SMBCLK SMBDATA	PCH +3VALW	X	X	X	V +3VS	V +3VS	X	X	V +3VS
SML0CLK SML0DATA	PCH +3VALW	X	X	X	X	X	X	X	X
SML1CLK SML1DATA	PCH +3VALW	V +3VS	X	V +3VS	X	X	V +3VS	X	X

GPU BOM Structure Table

BOM Structure	N14P-GV2
OPT@	V
OPTNOGCLK@	V
GV2@	V
GC6@	Select

Security Classification	Compal Secret Data		
Issued Date	2012/12/26	Deciphered Date	2012/07/11

THIS SHEET OF ENGINEERING DRAWING IS THE PROPRIETARY PROPERTY OF COMPAL ELECTRONICS, INC. AND CONTAINS CONFIDENTIAL AND TRADE SECRET INFORMATION. THIS SHEET MAY NOT BE TRANSFERED FROM THE CUSTODY OF THE COMPETENT DIVISION OF R&D DEPARTMENT EXCEPT AS AUTHORIZED BY COMPAL ELECTRONICS, INC. NEITHER THIS SHEET NOR THE INFORMATION IT CONTAINS MAY BE USED BY OR DISCLOSED TO ANY THIRD PARTY WITHOUT PRIOR WRITTEN CONSENT OF COMPAL ELECTRONICS, INC.

Compal Electronics, Inc.

Title: Notes List

Size: Custom | Document Number: LA-9603P | Rev: 1.0

Date: Wednesday, January 09, 2013 | Sheet 3 of 62

WWW.AliSaler.Com

Hot plug detect for IFP link C

VGA and GDDR3 Voltage Rails (N13x GPIO)

GPIO	I/O	ACTIVE	Function Description
GPIO0	I	H	GC6_FB_CLAMP
GPIO1	OUT	-	MEM_VDD_CTL
GPIO2	OUT	H	Panel Back-Light brightness(PWM capable)
GPIO3	OUT	H	Panel Power Enable
GPIO4	OUT	H	Panel Back-Light On/Off (PWM)
GPIO5	OUT	-	RESERVED
GPIO6	OUT	L	GC6_FB_REQ
GPIO7	OUT	-	3DVision
GPIO8	I/O	L	Thermal Catastrophic Over Temperature
GPIO9	OUT	L	Thermal Alert
GPIO10	OUT	-	Memory VREF Control
GPIO11	OUT	-	PWM_VID
GPIO12	IN		AC Power Detect Input (10K pull low)
GPIO13	OUT	-	PSI
GPIO14	OUT	N/A	
GPIO15	IN		
GPIO16	OUT	N/A	
GPIO17	IN	N/A	
GPIO18	IN		
GPIO19	IN	N/A	

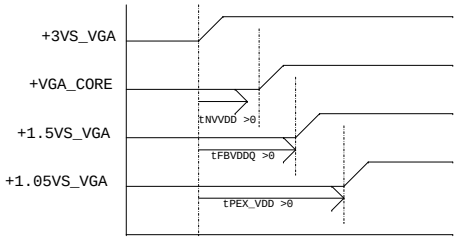

1. all power rail ramp up time should be larger than 40us

2. Optimus system VDD33 avoids drop down earlier than NVDD and FBVDDQ

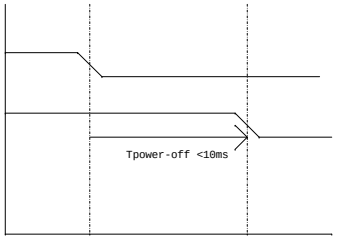

1.all GPU power rails should be turned off within 10ms

Performance Mode P0 TDP at Tj = 102 C* (GDDR3)

Products	GPU (4)	Mem (1,5)	NVCLK /MCLK	NVVDD			FBVDD (1.35V)		FBVDDQ (GPU+Mem) (1.35V)		PCI Express (1.05V) (6)		I/O and PLLVDD (1.8V)		I/O and PLLVDD (1.05V)		Other (3.3V)	
	(W)	(W)	(MHz)	(V)	(A)	(W)	(A)	(W)	(A)	(W)	(mA)	(W)	(mA)	(W)	(mA)	(W)	(mA)	(W)
N13P-GL 64bit 1GB GDDR3	TBD	TBD	TBD	TBD	TBD	TBD	TBD	TBD	TBD	TBD	TBD	TBD	TBD	TBD	TBD	TBD	TBD	TBD

Physical Strapping pin	Power Rail	Logical Strapping Bit3	Logical Strapping Bit2	Logical Strapping Bit1	Logical Strapping Bit0
ROM_SCLK	+3VS_VGA	PCI_DEVID[4]	SUB_VENDOR	SLOT_CLK_CFG/PCI_DEVID[5]	PEX_PLL_EN_TERM
ROM_SI	+3VS_VGA	RAM_CFG[3]	RAM_CFG[2]	RAM_CFG[1]	RAM_CFG[0]
ROM_SO	+3VS_VGA	FB[1]	FB[0]	SMB_ALT_ADDR	VGA_DEVICE
STRAP0	+3VS_VGA	USER[3]	USER[2]	USER[1]	USER[0]
STRAP1	+3VS_VGA	3GIO_PAD_CFG_ADR[3]	3GIO_PAD_CFG_ADR[2]	3GIO_PAD_CFG_ADR[1]	3GIO_PAD_CFG_ADR[0]
STRAP2	+3VS_VGA	PCI_DEVID[3]	PCI_DEVID[2]	PCI_DEVID[1]	PCI_DEVID[0]
STRAP3	+3VS_VGA	SOR3_EXPOSED	SOR2_EXPOSED	SOR1_EXPOSED	SOR0_EXPOSED
STRAP4	+3VS_VGA	RESERVED	PCIE_SPEED_ CHANGE_GEN3	PCIE_MAX_SPEED	DP_PLL_VDD33V

WWW.AliSaler.Com

PEG_ICOMPI and RCOMPO signals should be shorted and routed
with - max length = 500 mils - typical impedance = 43 mohms
PEG_ICOMPO signals should be routed with - max length = 500 mils
- typical impedance = 14.5 mohms

+V1.05S_VCCP
R1
24.9_0402_1%

JCPU1A

<16>	DMI_CRX_PTX_N0	B27	DMI_RX#[0]	DMI	
<16>	DMI_CRX_PTX_N1	B25	DMI_RX#[1]		
<16>	DMI_CRX_PTX_N2	A25	DMI_RX#[2]		
<16>	DMI_CRX_PTX_N3	B24	DMI_RX#[3]		
<16>	DMI_CRX_PTX_P0	B28	DMI_RX[0]		
<16>	DMI_CRX_PTX_P1	B26	DMI_RX[1]		
<16>	DMI_CRX_PTX_P2	A24	DMI_RX[2]		
<16>	DMI_CRX_PTX_P3	B23	DMI_RX[3]		
<16>	DMI_CTX_PRX_N0	G21	DMI_TX#[0]		
<16>	DMI_CTX_PRX_N1	E22	DMI_TX#[1]		
<16>	DMI_CTX_PRX_N2	F21	DMI_TX#[2]		
<16>	DMI_CTX_PRX_N3	D21	DMI_TX#[3]		
<16>	DMI_CTX_PRX_P0	G22	DMI_TX[0]		
<16>	DMI_CTX_PRX_P1	D22	DMI_TX[1]		
<16>	DMI_CTX_PRX_P2	F20	DMI_TX[2]		
<16>	DMI_CTX_PRX_P3	C21	DMI_TX[3]		
<16>	FDI_CTX_PRX_N0	A21	FDI0_TX#[0]	Intel(R) FDI	
<16>	FDI_CTX_PRX_N1	H19	FDI0_TX#[1]		
<16>	FDI_CTX_PRX_N2	E19	FDI0_TX#[2]		
<16>	FDI_CTX_PRX_N3	F18	FDI0_TX#[3]		
<16>	FDI_CTX_PRX_N4	B21	FDI1_TX#[0]		
<16>	FDI_CTX_PRX_N5	C20	FDI1_TX#[1]		
<16>	FDI_CTX_PRX_N6	D18	FDI1_TX#[2]		
<16>	FDI_CTX_PRX_N7	E17	FDI1_TX#[3]		
<16>	FDI_CTX_PRX_P0	A22	FDI0_TX[0]		
<16>	FDI_CTX_PRX_P1	G19	FDI0_TX[1]		
<16>	FDI_CTX_PRX_P2	E20	FDI0_TX[2]		
<16>	FDI_CTX_PRX_P3	G18	FDI0_TX[3]		
<16>	FDI_CTX_PRX_P4	B20	FDI1_TX[0]		
<16>	FDI_CTX_PRX_P5	C19	FDI1_TX[1]		
<16>	FDI_CTX_PRX_P6	D19	FDI1_TX[2]		
<16>	FDI_CTX_PRX_P7	F17	FDI1_TX[3]		
<16>	FDI_FSYNC0	J18	FDI0_FSYNC		
<16>	FDI_FSYNC1	J17	FDI1_FSYNC		
<16>	FDI_INT	H20	FDI_INT		
<16>	FDI_LSYNC0	J19	FDI0_LSYNC		
<16>	FDI_LSYNC1	H17	FDI1_LSYNC		
	EDP_COMP	A18	eDP_COMPIO	eDP	
		A17	eDP_ICOMPO		
		B16	eDP_HPD#		
		C15	eDP_AUX		
		D15	eDP_AUX#		
		C17	eDP_TX[0]		
		F16	eDP_TX[1]		
		C16	eDP_TX[2]		
		G15	eDP_TX[3]		
		C18	eDP_TX#[0]		
		E16	eDP_TX#[1]		
		D16	eDP_TX#[2]		
		F15	eDP_TX#[3]		

TYCO_2013620-2_IVY BRIDGE

PCI EXPRESS* - GRAPHICS

PEG_ICOMPI	J22	PEG_COMP
PEG_ICOMPO	J21	
PEG_RCOMPO	H22	

PCIE_CRX_GTX_N[0..15] <23>

PEG_RX#[0]	K33	PCIE_CRX_GTX_N15
PEG_RX#[1]	M35	PCIE_CRX_GTX_N14
PEG_RX#[2]	L34	PCIE_CRX_GTX_N13
PEG_RX#[3]	J35	PCIE_CRX_GTX_N12
PEG_RX#[4]	J32	PCIE_CRX_GTX_N11
PEG_RX#[5]	H34	PCIE_CRX_GTX_N10
PEG_RX#[6]	H31	PCIE_CRX_GTX_N9
PEG_RX#[7]	G33	PCIE_CRX_GTX_N8
PEG_RX#[8]	G30	PCIE_CRX_GTX_N7
PEG_RX#[9]	F35	PCIE_CRX_GTX_N6
PEG_RX#[10]	E34	PCIE_CRX_GTX_N5
PEG_RX#[11]	E32	PCIE_CRX_GTX_N4
PEG_RX#[12]	D33	PCIE_CRX_GTX_N3
PEG_RX#[13]	D31	PCIE_CRX_GTX_N2
PEG_RX#[14]	B33	PCIE_CRX_GTX_N1
PEG_RX#[15]	C32	PCIE_CRX_GTX_N0

PCIE_CRX_GTX_P[0..15] <23>

PEG_RX[0]	J33	PCIE_CRX_GTX_P15
PEG_RX[1]	L35	PCIE_CRX_GTX_P14
PEG_RX[2]	K34	PCIE_CRX_GTX_P13
PEG_RX[3]	H35	PCIE_CRX_GTX_P12
PEG_RX[4]	H32	PCIE_CRX_GTX_P11
PEG_RX[5]	G34	PCIE_CRX_GTX_P10
PEG_RX[6]	G31	PCIE_CRX_GTX_P9
PEG_RX[7]	F33	PCIE_CRX_GTX_P8
PEG_RX[8]	F30	PCIE_CRX_GTX_P7
PEG_RX[9]	E35	PCIE_CRX_GTX_P6
PEG_RX[10]	E33	PCIE_CRX_GTX_P5
PEG_RX[11]	F32	PCIE_CRX_GTX_P4
PEG_RX[12]	D34	PCIE_CRX_GTX_P3
PEG_RX[13]	E31	PCIE_CRX_GTX_P2
PEG_RX[14]	C33	PCIE_CRX_GTX_P1
PEG_RX[15]	B32	PCIE_CRX_GTX_P0

PCIE_CTX_GRX_N[0..15] <23>

PEG_TX#[0]	M29	PCIE_CTX_GRX_C_N15	C1 @	1	2	0.22U 0402 6.3V K	PCIE_CTX_GRX_N15
PEG_TX#[1]	M32	PCIE_CTX_GRX_C_N14	C2 @	1	2	0.22U 0402 6.3V K	PCIE_CTX_GRX_N14
PEG_TX#[2]	M31	PCIE_CTX_GRX_C_N13	C3 @	1	2	0.22U 0402 6.3V K	PCIE_CTX_GRX_N13
PEG_TX#[3]	L32	PCIE_CTX_GRX_C_N12	C4 @	1	2	0.22U 0402 6.3V K	PCIE_CTX_GRX_N12
PEG_TX#[4]	L29	PCIE_CTX_GRX_C_N11	C5 @	1	2	0.22U 0402 6.3V K	PCIE_CTX_GRX_N11
PEG_TX#[5]	K31	PCIE_CTX_GRX_C_N10	C6 @	1	2	0.22U 0402 6.3V K	PCIE_CTX_GRX_N10
PEG_TX#[6]	K28	PCIE_CTX_GRX_C_N9	C7 @	1	2	0.22U 0402 6.3V K	PCIE_CTX_GRX_N9
PEG_TX#[7]	J30	PCIE_CTX_GRX_C_N8	C8 @	1	2	0.22U 0402 6.3V K	PCIE_CTX_GRX_N8
PEG_TX#[8]	J28	PCIE_CTX_GRX_C_N7	C9 OPT@	1	2	0.22U 0402 6.3V K	PCIE_CTX_GRX_N7
PEG_TX#[9]	H29	PCIE_CTX_GRX_C_N6	C10 OPT@	1	2	0.22U 0402 6.3V K	PCIE_CTX_GRX_N6
PEG_TX#[10]	G27	PCIE_CTX_GRX_C_N5	C11 OPT@	1	2	0.22U 0402 6.3V K	PCIE_CTX_GRX_N5
PEG_TX#[11]	E29	PCIE_CTX_GRX_C_N4	C12 OPT@	1	2	0.22U 0402 6.3V K	PCIE_CTX_GRX_N4
PEG_TX#[12]	F27	PCIE_CTX_GRX_C_N3	C13 OPT@	1	2	0.22U 0402 6.3V K	PCIE_CTX_GRX_N3
PEG_TX#[13]	D28	PCIE_CTX_GRX_C_N2	C14 OPT@	1	2	0.22U 0402 6.3V K	PCIE_CTX_GRX_N2
PEG_TX#[14]	F26	PCIE_CTX_GRX_C_N1	C15 OPT@	1	2	0.22U 0402 6.3V K	PCIE_CTX_GRX_N1
PEG_TX#[15]	E25	PCIE_CTX_GRX_C_N0	C16 OPT@	1	2	0.22U 0402 6.3V K	PCIE_CTX_GRX_N0

PCIE_CTX_GRX_P[0..15] <23>

PEG_TX[0]	M28	PCIE_CTX_GRX_C_P15	C17 @	1	2	0.22U 0402 6.3V K	PCIE_CTX_GRX_P15
PEG_TX[1]	M33	PCIE_CTX_GRX_C_P14	C18 @	1	2	0.22U 0402 6.3V K	PCIE_CTX_GRX_P14
PEG_TX[2]	M30	PCIE_CTX_GRX_C_P13	C19 @	1	2	0.22U 0402 6.3V K	PCIE_CTX_GRX_P13
PEG_TX[3]	L31	PCIE_CTX_GRX_C_P12	C20 @	1	2	0.22U 0402 6.3V K	PCIE_CTX_GRX_P12
PEG_TX[4]	L28	PCIE_CTX_GRX_C_P11	C21 @	1	2	0.22U 0402 6.3V K	PCIE_CTX_GRX_P11
PEG_TX[5]	K30	PCIE_CTX_GRX_C_P10	C22 @	1	2	0.22U 0402 6.3V K	PCIE_CTX_GRX_P10
PEG_TX[6]	K27	PCIE_CTX_GRX_C_P9	C23 @	1	2	0.22U 0402 6.3V K	PCIE_CTX_GRX_P9
PEG_TX[7]	J29	PCIE_CTX_GRX_C_P8	C24 @	1	2	0.22U 0402 6.3V K	PCIE_CTX_GRX_P8
PEG_TX[8]	J27	PCIE_CTX_GRX_C_P7	C25 OPT@	1	2	0.22U 0402 6.3V K	PCIE_CTX_GRX_P7
PEG_TX[9]	H28	PCIE_CTX_GRX_C_P6	C26 OPT@	1	2	0.22U 0402 6.3V K	PCIE_CTX_GRX_P6
PEG_TX[10]	G28	PCIE_CTX_GRX_C_P5	C27 OPT@	1	2	0.22U 0402 6.3V K	PCIE_CTX_GRX_P5
PEG_TX[11]	E28	PCIE_CTX_GRX_C_P4	C28 OPT@	1	2	0.22U 0402 6.3V K	PCIE_CTX_GRX_P4
PEG_TX[12]	F28	PCIE_CTX_GRX_C_P3	C29 OPT@	1	2	0.22U 0402 6.3V K	PCIE_CTX_GRX_P3
PEG_TX[13]	D27	PCIE_CTX_GRX_C_P2	C30 OPT@	1	2	0.22U 0402 6.3V K	PCIE_CTX_GRX_P2
PEG_TX[14]	E26	PCIE_CTX_GRX_C_P1	C31 OPT@	1	2	0.22U 0402 6.3V K	PCIE_CTX_GRX_P1
PEG_TX[15]	D25	PCIE_CTX_GRX_C_P0	C32 OPT@	1	2	0.22U 0402 6.3V K	PCIE_CTX_GRX_P0

eDP_COMPIO and ICOMPO signals should be shorted near balls and routed with typical impedance <25 mohms

+V1.05S_VCCP
R7
24.9_0402_1%

PEG Static Lane Reversal - CFG2 is for the 16x

CFG2	1: Normal Operation; Lane # definition matches socket pin map definition * 0:Lane Reversed

Security Classification	Compal Secret Data		
Issued Date	2012/12/26	Deciphered Date	2012/07/11

THIS SHEET OF ENGINEERING DRAWING IS THE PROPRIETARY PROPERTY OF COMPAL ELECTRONICS, INC. AND CONTAINS CONFIDENTIAL AND TRADE SECRET INFORMATION. THIS SHEET MAY NOT BE TRANSFERED FROM THE CUSTODY OF THE COMPETENT DIVISION OF R&D DEPARTMENT EXCEPT AS AUTHORIZED BY COMPAL ELECTRONICS, INC. NEITHER THIS SHEET NOR THE INFORMATION IT CONTAINS MAY BE USED BY OR DISCLOSED TO ANY THIRD PARTY WITHOUT PRIOR WRITTEN CONSENT OF COMPAL ELECTRONICS, INC.

Title: **PROCESSOR(1/7) DMI,FDI,PEG**

Size: Custom | Document Number: **LA-9603P** | Rev: 1.0

Date: Wednesday, January 09, 2013 | Sheet 5 of 62

WWW.AliSaler.Com

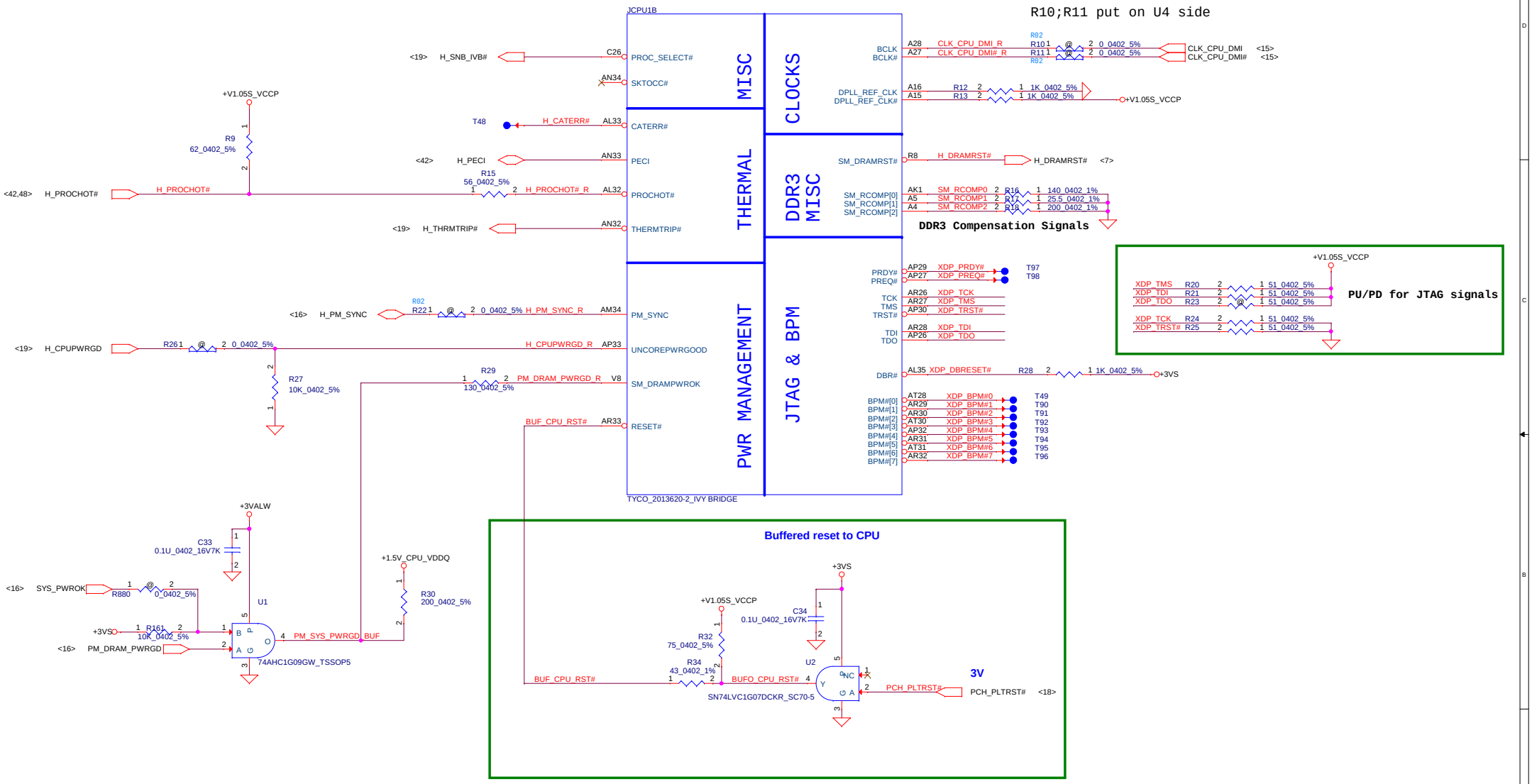

Security Classification	Compal Secret Data		
Issued Date	2012/12/26	Deciphered Date	2012/07/11

THIS SHEET OF ENGINEERING DRAWING IS THE PROPRIETARY PROPERTY OF COMPAL ELECTRONICS, INC. AND CONTAINS CONFIDENTIAL AND TRADE SECRET INFORMATION. THIS SHEET MAY NOT BE TRANSFERED FROM THE CUSTODY OF THE COMPETENT DIVISION OF R&D DEPARTMENT EXCEPT AS AUTHORIZED BY COMPAL ELECTRONICS, INC. NEITHER THIS SHEET NOR THE INFORMATION IT CONTAINS MAY BE USED BY OR DISCLOSED TO ANY THIRD PARTY WITHOUT PRIOR WRITTEN CONSENT OF COMPAL ELECTRONICS, INC.

Compal Electronics, Inc.

Title: PROCESSOR(2/7) PM,XDP,CLK

Size: Custom | Document Number: LA-9603P | Rev: 1.0

Date: Wednesday, January 09, 2013 | Sheet 6 of 62

WWW.AliSaler.Com

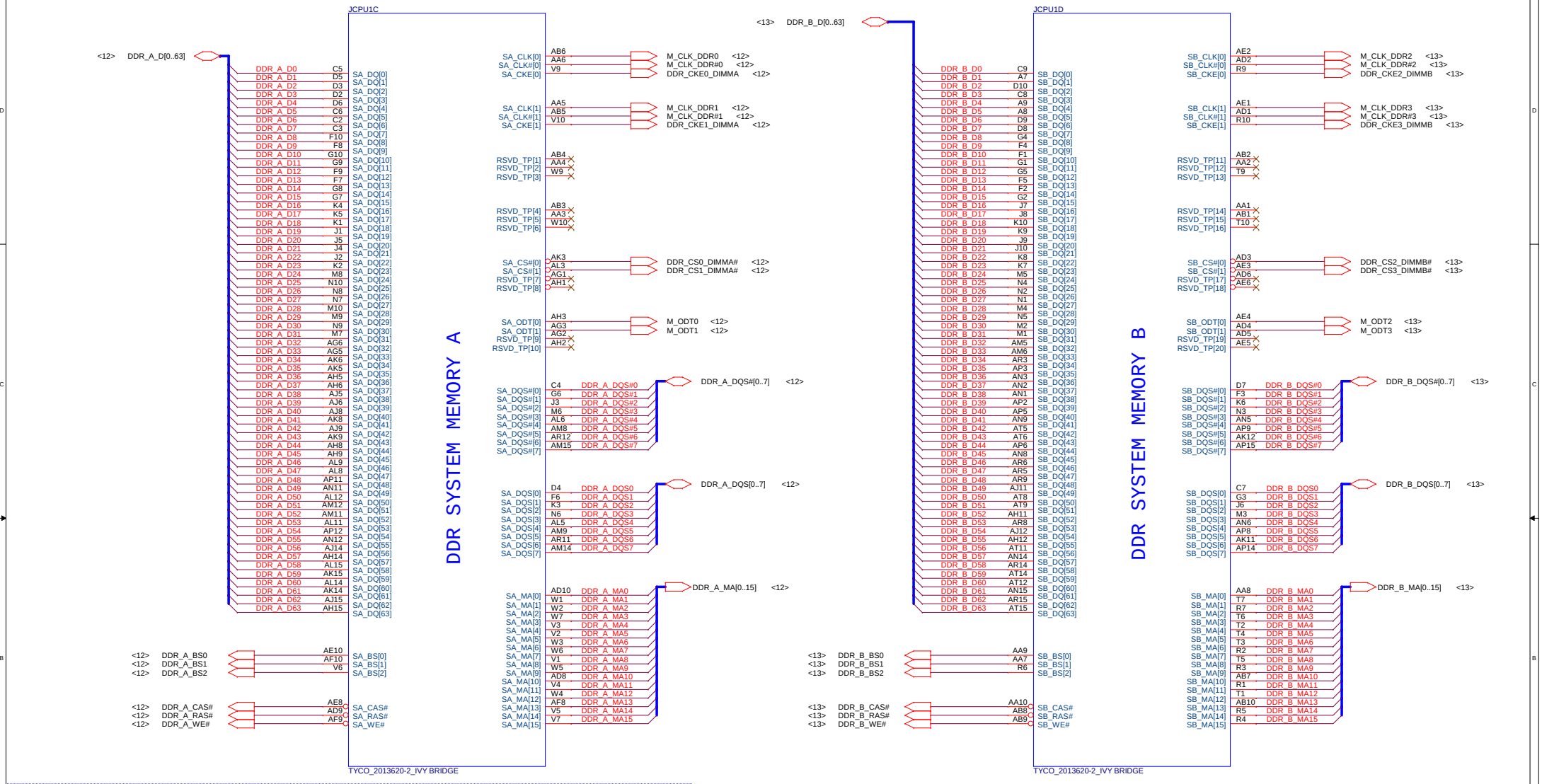

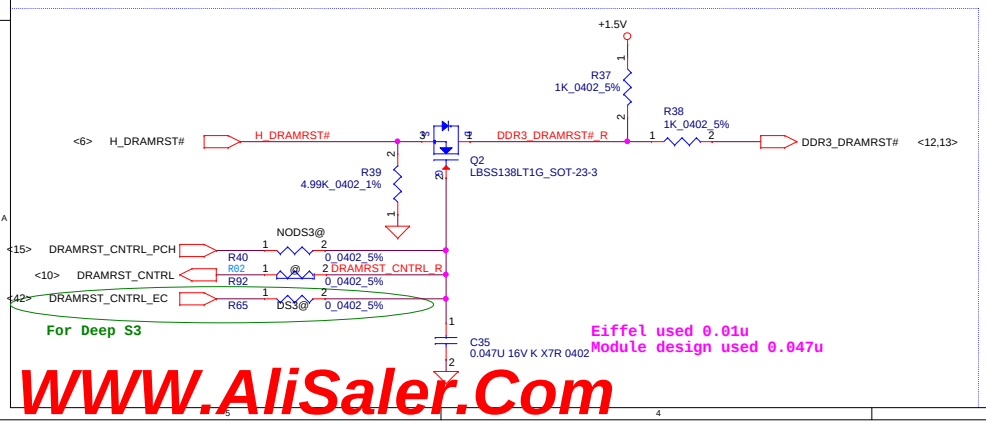

Security Classification	Compal Secret Data		
Issued Date	2012/12/26	Deciphered Date	2012/07/11

THIS SHEET OF ENGINEERING DRAWING IS THE PROPRIETARY PROPERTY OF COMPAL ELECTRONICS, INC. AND CONTAINS CONFIDENTIAL AND TRADE SECRET INFORMATION. THIS SHEET MAY NOT BE TRANSFERED FROM THE CUSTODY OF THE COMPETENT DIVISION OF R&D DEPARTMENT EXCEPT AS AUTHORIZED BY COMPAL ELECTRONICS, INC. NEITHER THIS SHEET NOR THE INFORMATION IT CONTAINS MAY BE USED BY OR DISCLOSED TO ANY THIRD PARTY WITHOUT PRIOR WRITTEN CONSENT OF COMPAL ELECTRONICS, INC.

Compal Electronics, Inc.

Title: PROCESSOR(3/7) DDRIII

Size: Custom | Document Number: LA-9603P | Rev: 1.0

Date: Wednesday, January 09, 2013 | Sheet 7 of 62

WWW.AliSaler.Com

CFG Straps for Processor

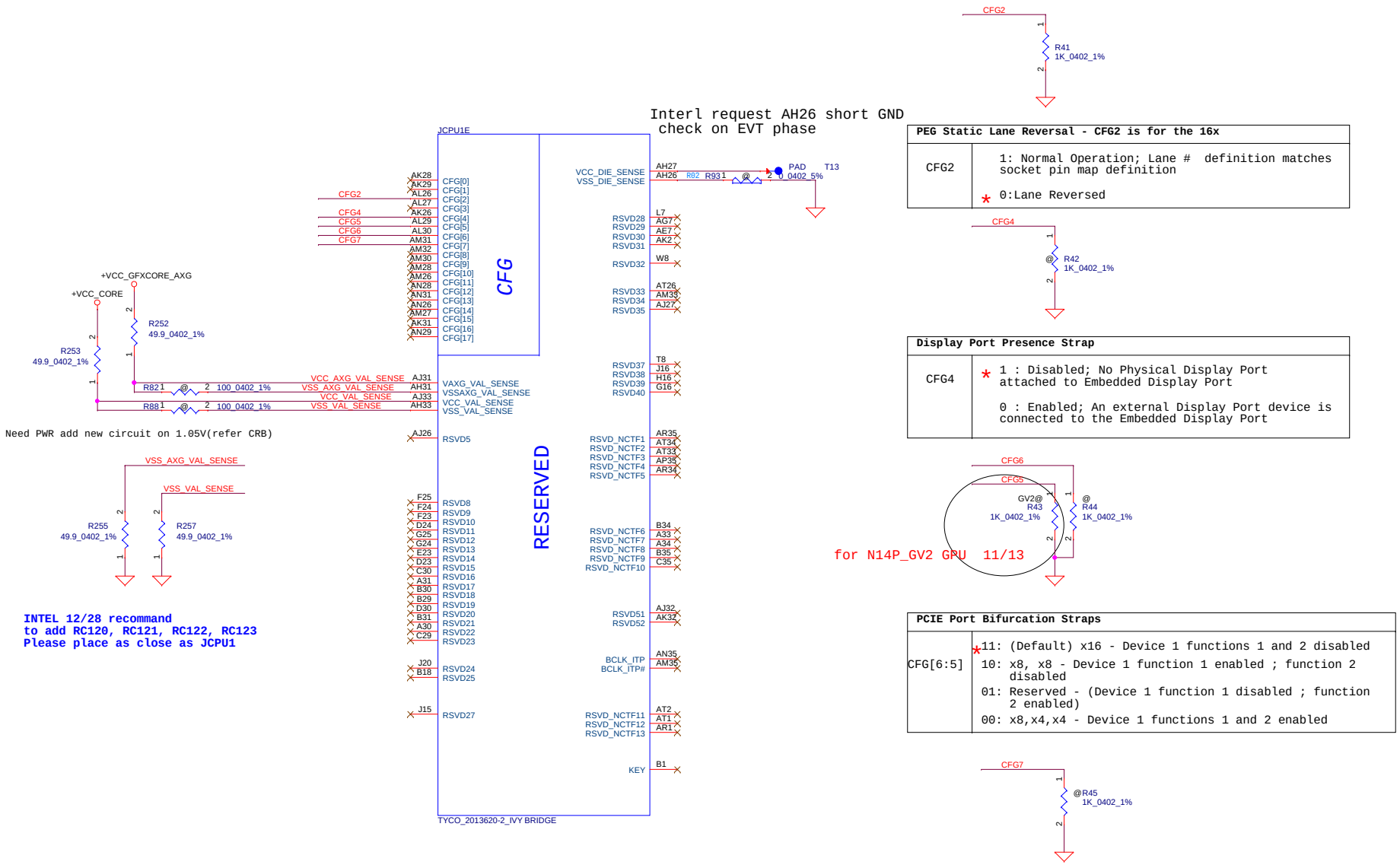

INTEL 12/28 recommand
to add RC120, RC121, RC122, RC123
Please place as close as JCPU1

PEG Static Lane Reversal - CFG2 is for the 16x	
CFG2	1: Normal Operation; Lane # definition matches socket pin map definition * 0:Lane Reversed

Display Port Presence Strap	
CFG4	* 1 : Disabled; No Physical Display Port attached to Embedded Display Port 0 : Enabled; An external Display Port device is connected to the Embedded Display Port

PCIE Port Bifurcation Straps	
CFG[6:5]	*11: (Default) x16 - Device 1 functions 1 and 2 disabled 10: x8, x8 - Device 1 function 1 enabled ; function 2 disabled 01: Reserved - (Device 1 function 1 disabled ; function 2 enabled) 00: x8,x4,x4 - Device 1 functions 1 and 2 enabled

PEG DEFER TRAINING	
CFG7	1: (Default) PEG Train immediately following xxRESETB de assertion 0: PEG Wait for BIOS for training

Security Classification	Compal Secret Data		
Issued Date	2012/12/26	Deciphered Date	2012/07/11

THIS SHEET OF ENGINEERING DRAWING IS THE PROPRIETARY PROPERTY OF COMPAL ELECTRONICS, INC. AND CONTAINS CONFIDENTIAL AND TRADE SECRET INFORMATION. THIS SHEET MAY NOT BE TRANSFERED FROM THE CUSTODY OF THE COMPETENT DIVISION OF R&D DEPARTMENT EXCEPT AS AUTHORIZED BY COMPAL ELECTRONICS, INC. NEITHER THIS SHEET NOR THE INFORMATION IT CONTAINS MAY BE USED BY OR DISCLOSED TO ANY THIRD PARTY WITHOUT PRIOR WRITTEN CONSENT OF COMPAL ELECTRONICS, INC.

Compal Electronics, Inc.

Title: PROCESSOR(4/7) RSVD,CFG

Size: Custom | Document Number: LA-9603P | Rev: 1.0

Date: Wednesday, January 09, 2013 | Sheet 8 of 62

WWW.AliSaler.Com

POWER

JCPU1F

+VCC_CORE

QC=94A
DC=53A

+V1.05S_VCCP

8.5A

CORE SUPPLY

AG35	VCC1
AG34	VCC2
AG33	VCC3
AG32	VCC4
AG31	VCC5
AG30	VCC6
AG29	VCC7
AG28	VCC8
AG27	VCC9
AG26	VCC10
AF35	VCC11
AF34	VCC12
AF33	VCC13
AF32	VCC14
AF31	VCC15
AF30	VCC16
AF29	VCC17
AF28	VCC18
AF27	VCC19
AF26	VCC20
AD35	VCC21
AD34	VCC22
AD33	VCC23
AD32	VCC24
AD31	VCC25
AD30	VCC26
AD29	VCC27
AD28	VCC28
AD27	VCC29
AD26	VCC30
AC35	VCC31
AC34	VCC32
AC33	VCC33
AC32	VCC34
AC31	VCC35
AC30	VCC36
AC29	VCC37
AC28	VCC38
AC27	VCC39
AC26	VCC40
AA35	VCC41
AA34	VCC42
AA33	VCC43
AA32	VCC44
AA31	VCC45
AA30	VCC46
AA29	VCC47
AA28	VCC48
AA27	VCC49
AA26	VCC50
Y35	VCC51
Y34	VCC52
Y33	VCC53
Y32	VCC54
Y31	VCC55
Y30	VCC56
Y29	VCC57
Y28	VCC58
Y27	VCC59
Y26	VCC60
V35	VCC61
V34	VCC62
V33	VCC63
V32	VCC64
V31	VCC65
V30	VCC66
V29	VCC67
V28	VCC68
V27	VCC69
V26	VCC70
U35	VCC71
U34	VCC72
U33	VCC73
U32	VCC74
U31	VCC75
U30	VCC76
U29	VCC77
U28	VCC78
U27	VCC79
U26	VCC80
R35	VCC81
R34	VCC82
R33	VCC83
R32	VCC84
R31	VCC85
R30	VCC86
R29	VCC87
R28	VCC88
R27	VCC89
R26	VCC90
P35	VCC91
P34	VCC92
P33	VCC93
P32	VCC94
P31	VCC95
P30	VCC96
P29	VCC97
P28	VCC98
P27	VCC99
P26	VCC100

PEG AND DDR

	AH13
VCCIO1	AH10
VCCIO2	AG10
VCCIO3	AC10
VCCIO4	Y10
VCCIO5	U10
VCCIO6	P10
VCCIO7	L10
VCCIO8	J14
VCCIO9	J13
VCCIO10	J12
VCCIO11	J11
VCCIO12	H14
VCCIO13	H12
VCCIO14	H11
VCCIO15	G14
VCCIO16	G13
VCCIO17	G12
VCCIO18	F14
VCCIO19	F13
VCCIO20	F12
VCCIO21	F11
VCCIO22	E14
VCCIO23	E12
VCCIO24	
	E11
VCCIO25	D14
VCCIO26	D13
VCCIO27	D12
VCCIO28	D11
VCCIO29	C14
VCCIO30	C13
VCCIO31	C12
VCCIO32	C11
VCCIO33	B14
VCCIO34	B12
VCCIO35	A14
VCCIO36	A13
VCCIO37	A12
VCCIO38	A11
VCCIO39	
	J23
VCCIO40	

SVID

+V1.05S_VCCP

C99
0.1U_0402_16V7K

R46
75_0402_5%

VR_SVID_CLK series-resistors close to VR

VIDALERT#	AJ29	H_CPU_SVIDALRT#	R47 1 2 43_0402_5%	VR_SVID_ALRT# <55>
VIDSCLK	AJ30	H_CPU_SVIDCLK	R02 R48 1 @ 2 0_0402_5%	VR_SVID_CLK <55>
VIDSOUT	AJ28	H_CPU_SVIDDAT	R02 R49 1 @ 2 0_0402_5%	VR_SVID_DAT <55>

R50 2 1 130_0402_5% +V1.05S_VCCP 0.1uF on power side

VCC_SENCE 100ohm +-1% pull-up to VCC near processor

SENSE LINES

Trace Impedance =27-33 ohm
Trace Length Matc < 25 mils

+VCC_CORE

R51
100_0402_1%

VCC_SENSE	AJ35	VCCSENSE_R	R02 R52 1 @ 2 0_0402_5%	VCCSENSE <55>
VSS_SENSE	AJ34	VSSSENSE_R	R02 R53 1 @ 2 0_0402_5%	VSSSENSE <55>

R54
100_0402_1%

VCCIO_SENSE	B10		
VSS_SENSE_VCCIO	A10	VSSIO_SENSE_L	1 R74 2 VSSIO_SENSE 10_0402_1% @

VCCIO_SENSE <53>

R74 & R79 put together

+V1.05S_VCCP

R79
2 1
10_0402_1%

VSSIO_SENSE_L <53>

VSS_SENCE 100ohm +-1% pull-down to GND near processor

TYCO_2013620-2_IVY BRIDGE

Security Classification	Compal Secret Data		
Issued Date	2012/12/26	Deciphered Date	2012/07/11

THIS SHEET OF ENGINEERING DRAWING IS THE PROPRIETARY PROPERTY OF COMPAL ELECTRONICS, INC. AND CONTAINS CONFIDENTIAL AND TRADE SECRET INFORMATION. THIS SHEET MAY NOT BE TRANSFERED FROM THE CUSTODY OF THE COMPETENT DIVISION OF R&D DEPARTMENT EXCEPT AS AUTHORIZED BY COMPAL ELECTRONICS, INC. NEITHER THIS SHEET NOR THE INFORMATION IT CONTAINS MAY BE USED BY OR DISCLOSED TO ANY THIRD PARTY WITHOUT PRIOR WRITTEN CONSENT OF COMPAL ELECTRONICS, INC.

Title: PROCESSOR(5/7) PWR,BYPASS

Size: Custom | Document Number: LA-9603P | Rev: 1.0

Date: Wednesday, January 09, 2013 | Sheet 9 of 62

WWW.AliSaler.Com

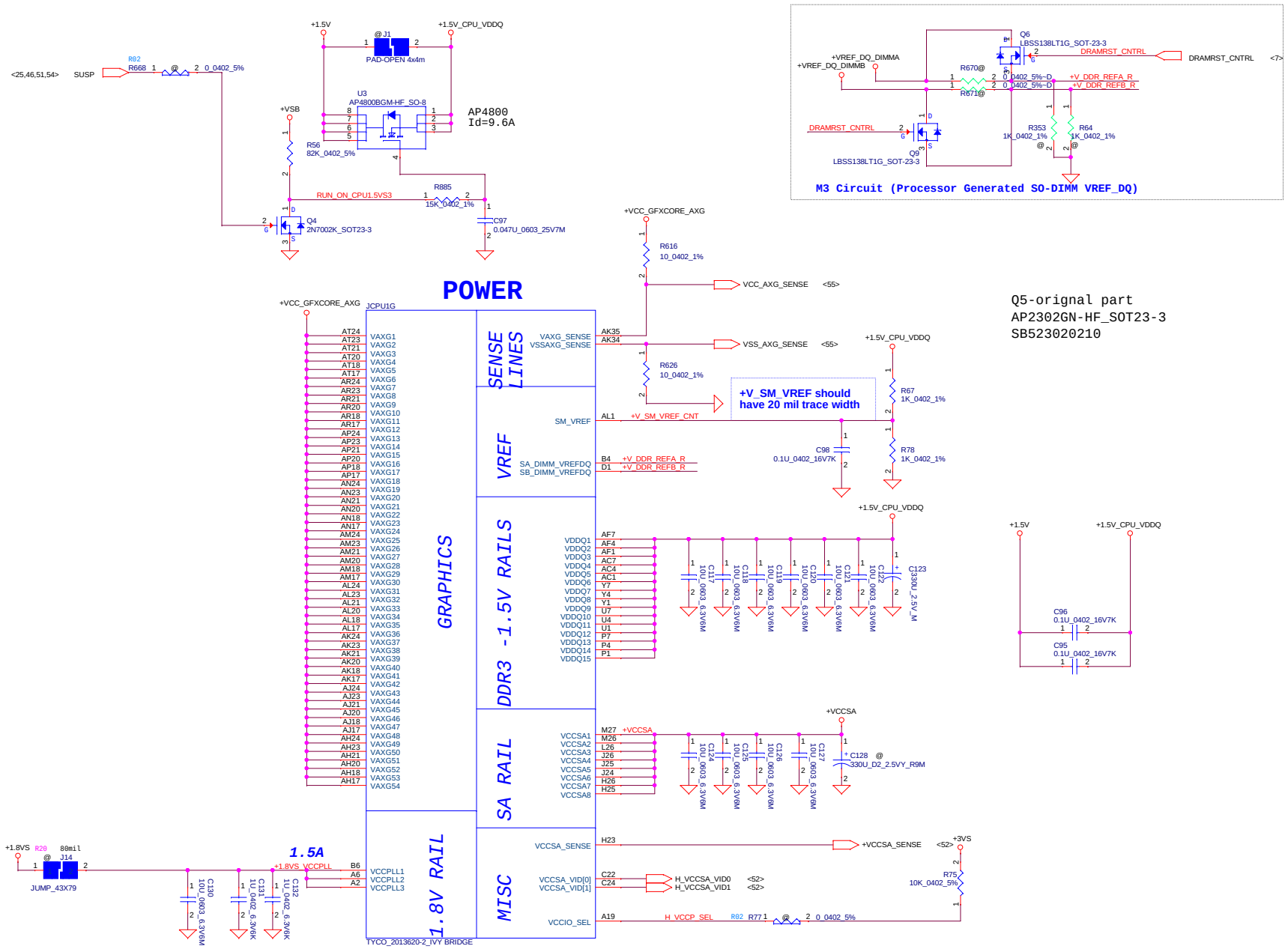

Security Classification	Compal Secret Data		
Issued Date	2012/12/26	Deciphered Date	2012/07/11

THIS SHEET OF ENGINEERING DRAWING IS THE PROPRIETARY PROPERTY OF COMPAL ELECTRONICS, INC. AND CONTAINS CONFIDENTIAL AND TRADE SECRET INFORMATION. THIS SHEET MAY NOT BE TRANSFERED FROM THE CUSTODY OF THE COMPETENT DIVISION OF R&D DEPARTMENT EXCEPT AS AUTHORIZED BY COMPAL ELECTRONICS, INC. NEITHER THIS SHEET NOR THE INFORMATION IT CONTAINS MAY BE USED BY OR DISCLOSED TO ANY THIRD PARTY WITHOUT PRIOR WRITTEN CONSENT OF COMPAL ELECTRONICS, INC.

Title: **PROCESSOR(6/7) PWR**

Size: Custom | Document Number: **LA-9603P** | Rev: 1.0

Date: Wednesday, January 09, 2013 | Sheet 10 of 62

WWW.AliSaler.Com

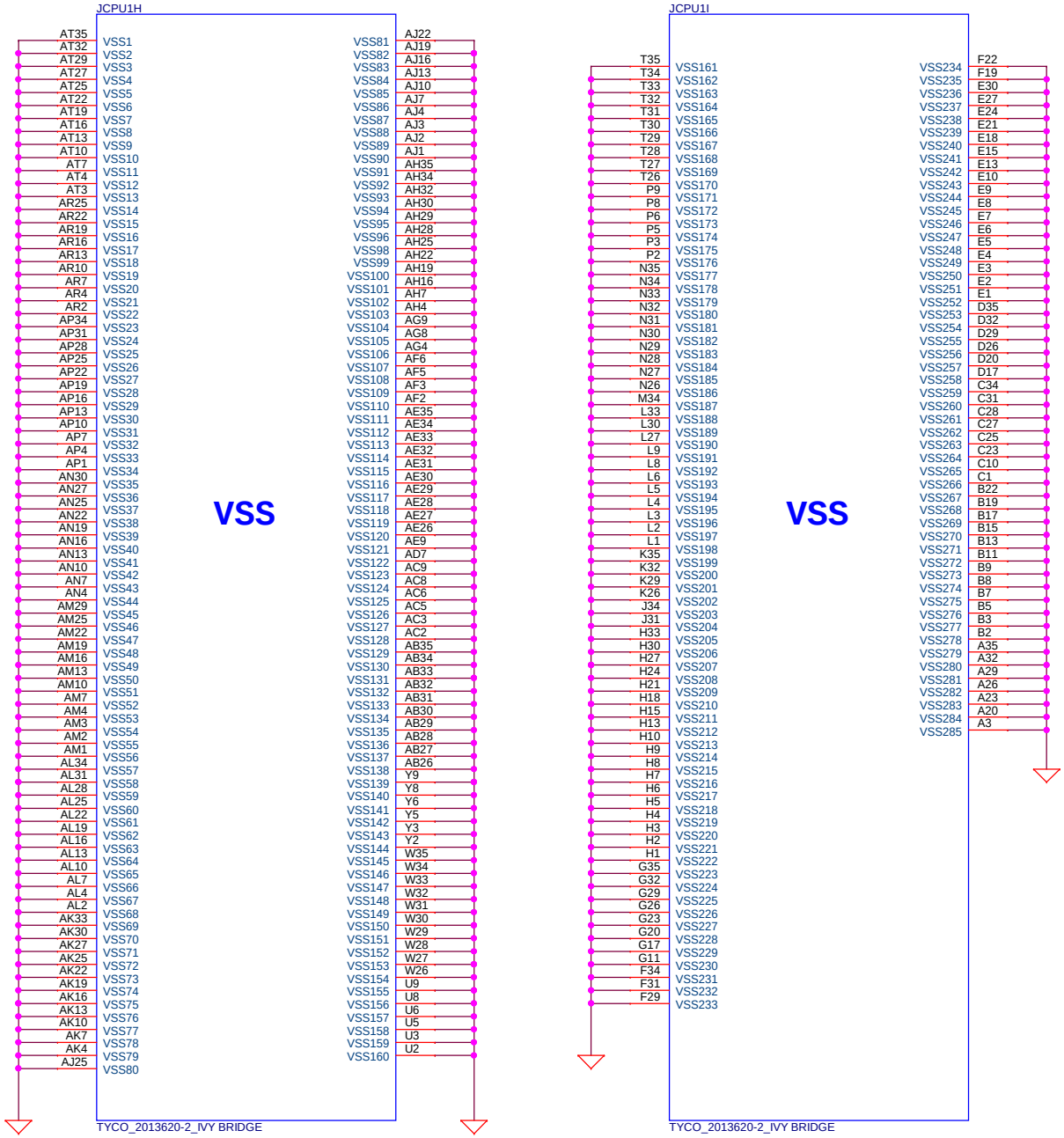

Security Classification	Compal Secret Data		
Issued Date	2012/12/26	Deciphered Date	2012/07/11

THIS SHEET OF ENGINEERING DRAWING IS THE PROPRIETARY PROPERTY OF COMPAL ELECTRONICS, INC. AND CONTAINS CONFIDENTIAL AND TRADE SECRET INFORMATION. THIS SHEET MAY NOT BE TRANSFERED FROM THE CUSTODY OF THE COMPETENT DIVISION OF R&D DEPARTMENT EXCEPT AS AUTHORIZED BY COMPAL ELECTRONICS, INC. NEITHER THIS SHEET NOR THE INFORMATION IT CONTAINS MAY BE USED BY OR DISCLOSED TO ANY THIRD PARTY WITHOUT PRIOR WRITTEN CONSENT OF COMPAL ELECTRONICS, INC.

Compal Electronics, Inc.

Title: **PROCESSOR(7/7) VSS**

Size: Custom | Document Number: **LA-9603P** | Rev: 1.0

Date: Wednesday, January 09, 2013 | Sheet 11 of 62

WWW.AliSaler.Com

DDR3 SO-DIMM A

JDIMM1

LCN_DAN06-K4806-0103

ME@

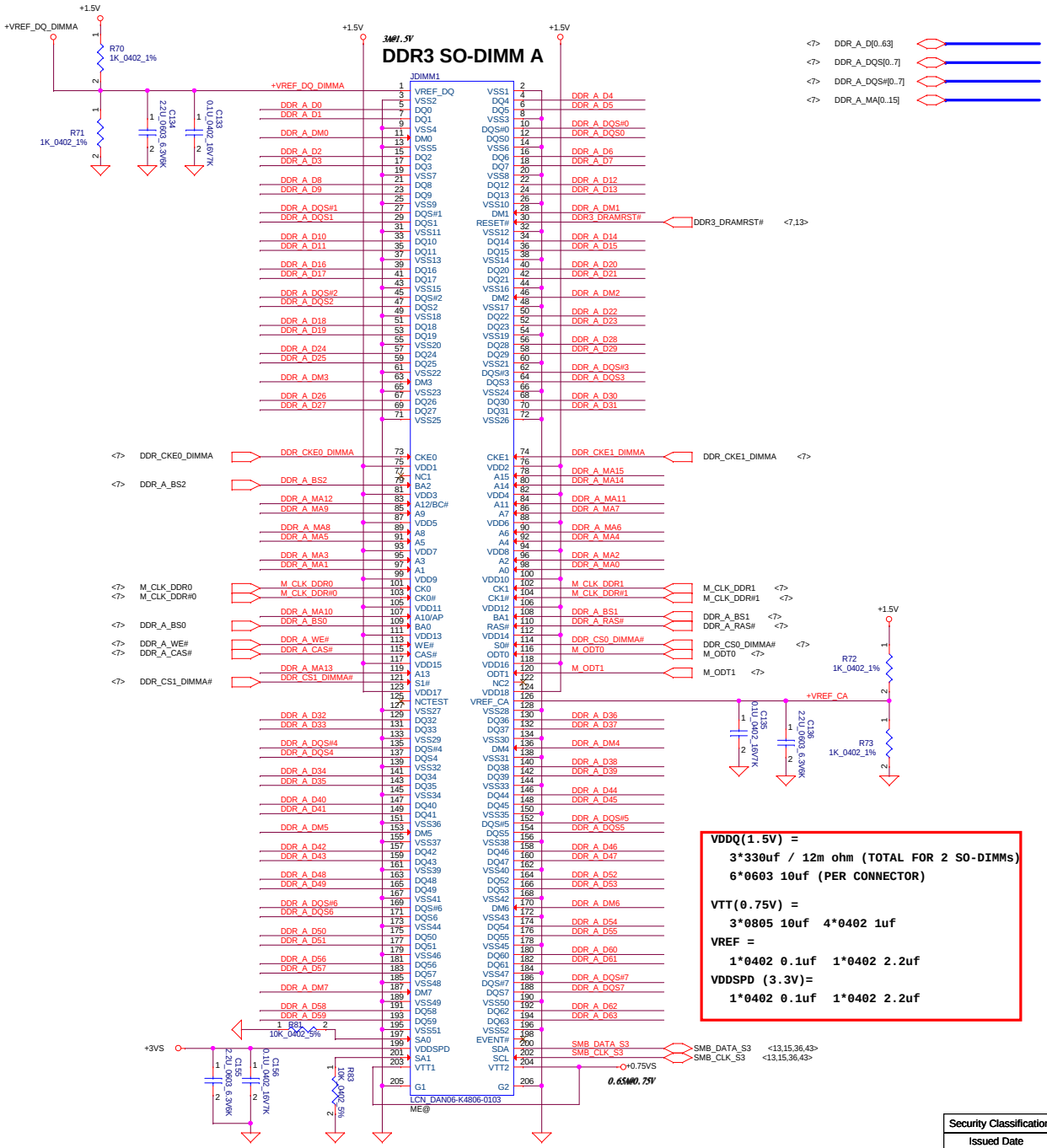

VDDQ(1.5V) =
3*330uf / 12m ohm (TOTAL FOR 2 SO-DIMMs)
6*0603 10uf (PER CONNECTOR)

VTT(0.75V) =
3*0805 10uf 4*0402 1uf

VREF =
1*0402 0.1uf 1*0402 2.2uf

VDDSPD (3.3V)=
1*0402 0.1uf 1*0402 2.2uf

Layout Note: Place near DIMM

OSCAN (220uF_6.3V_4.2L_ESR17m)*1=(SF000002Y00)
(10uF_0603_6.3V)*8
(0.1uF_402_10V)*4

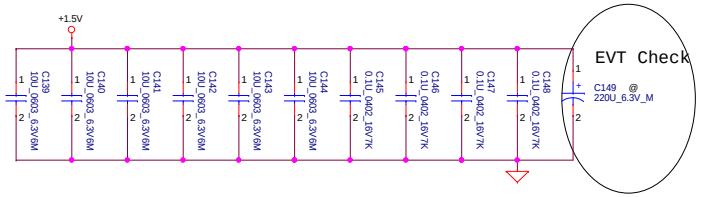

Layout Note: Place near DIMM

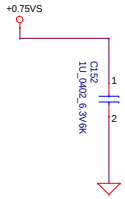

7/28 Update connect GND directly

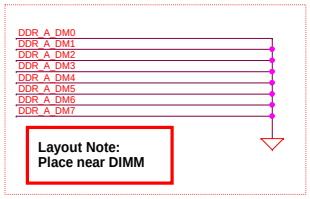

Layout Note: Place near DIMM

Security Classification	Compal Secret Data		
Issued Date	2012/12/26	Deciphered Date	2012/07/11

THIS SHEET OF ENGINEERING DRAWING IS THE PROPRIETARY PROPERTY OF COMPAL ELECTRONICS, INC. AND CONTAINS CONFIDENTIAL AND TRADE SECRET INFORMATION. THIS SHEET MAY NOT BE TRANSFERED FROM THE CUSTODY OF THE COMPETENT DIVISION OF R&D DEPARTMENT EXCEPT AS AUTHORIZED BY COMPAL ELECTRONICS, INC. NEITHER THIS SHEET NOR THE INFORMATION IT CONTAINS MAY BE USED BY OR DISCLOSED TO ANY THIRD PARTY WITHOUT PRIOR WRITTEN CONSENT OF COMPAL ELECTRONICS, INC.

Compal Electronics, Inc.

Title: **DDRIII-SODIMM SLOT1**

Size: Custom | Document Number: **LA-9603P** | Rev: 1.0

Date: Wednesday, January 09, 2013 | Sheet 12 of 62

WWW.AliSaler.Com

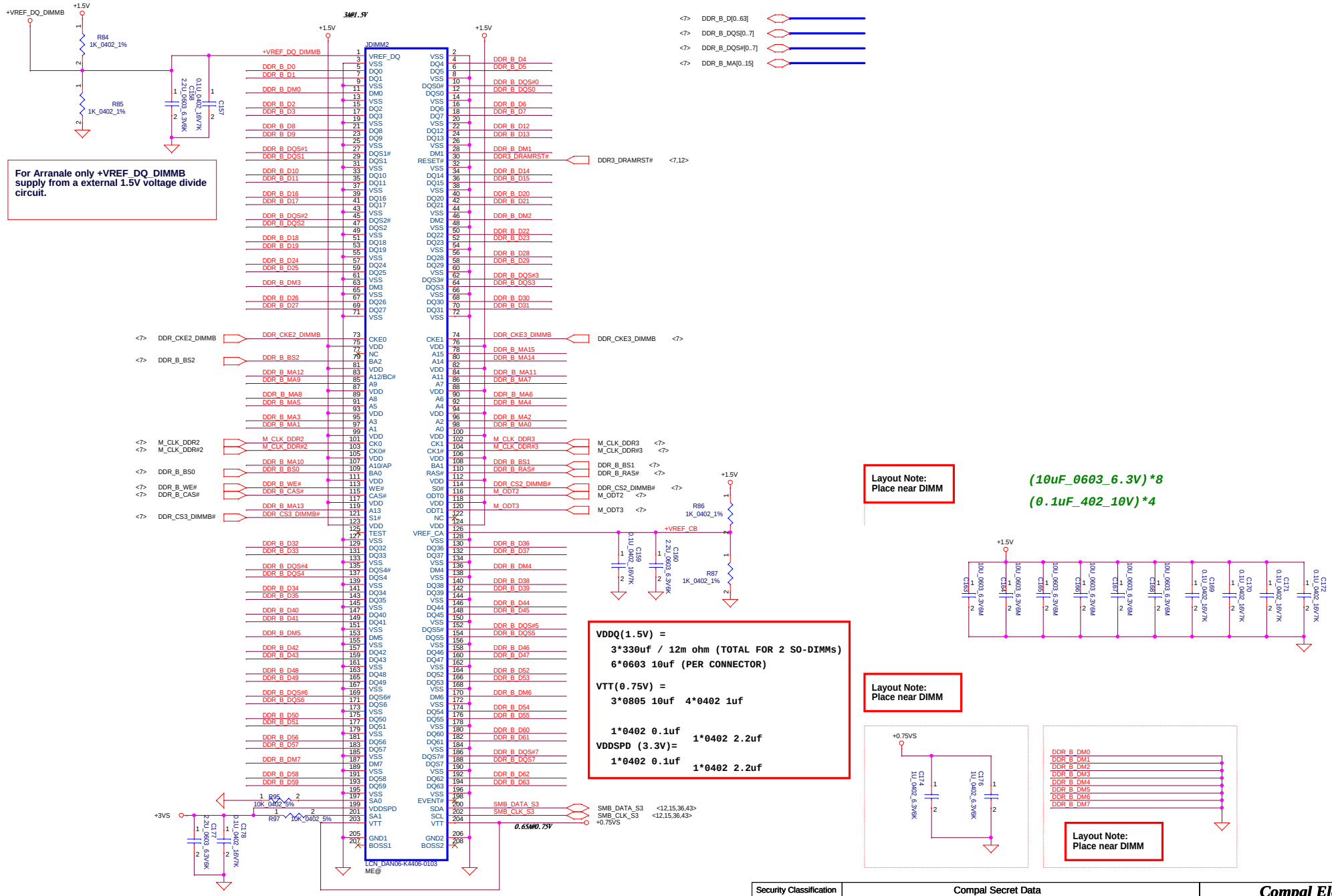

Security Classification	Compal Secret Data		
Issued Date	2012/12/26	Deciphered Date	2012/07/11

THIS SHEET OF ENGINEERING DRAWING IS THE PROPRIETARY PROPERTY OF COMPAL ELECTRONICS, INC. AND CONTAINS CONFIDENTIAL AND TRADE SECRET INFORMATION. THIS SHEET MAY NOT BE TRANSFERED FROM THE CUSTODY OF THE COMPETENT DIVISION OF R&D DEPARTMENT EXCEPT AS AUTHORIZED BY COMPAL ELECTRONICS, INC. NEITHER THIS SHEET NOR THE INFORMATION IT CONTAINS MAY BE USED BY OR DISCLOSED TO ANY THIRD PARTY WITHOUT PRIOR WRITTEN CONSENT OF COMPAL ELECTRONICS, INC.

Compal Electronics, Inc.

Title: **DDRIII-SODIMM SLOT2**

Size | Document Number: **LA-9603P** | Rev: 1.0

Date: Wednesday, January 09, 2013 | Sheet 13 of 62

WWW.AliSaler.Com

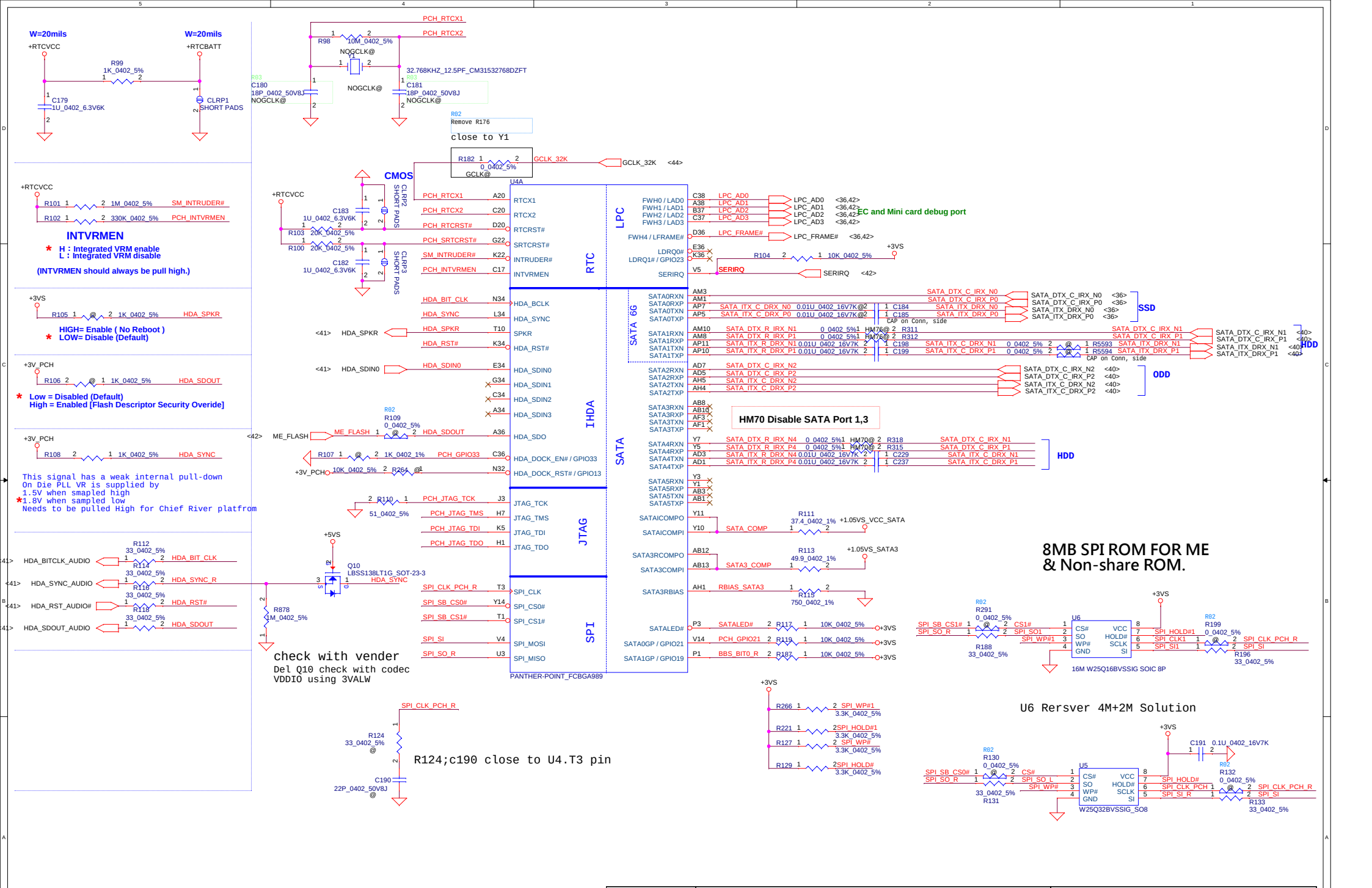

Security Classification	Compal Secret Data		
Issued Date	2012/12/26	Deciphered Date	2012/07/11

THIS SHEET OF ENGINEERING DRAWING IS THE PROPRIETARY PROPERTY OF COMPAL ELECTRONICS, INC. AND CONTAINS CONFIDENTIAL AND TRADE SECRET INFORMATION. THIS SHEET MAY NOT BE TRANSFERRED FROM THE CUSTODY OF THE COMPETENT DIVISION OF R&D DEPARTMENT EXCEPT AS AUTHORIZED BY COMPAL ELECTRONICS, INC. NEITHER THIS SHEET NOR THE INFORMATION IT CONTAINS MAY BE USED BY OR DISCLOSED TO ANY THIRD PARTY WITHOUT PRIOR WRITTEN CONSENT OF COMPAL ELECTRONICS, INC.

Compal Electronics, Inc.

Title: PCH (1/9) SATA,HDA,SPI, LPC, XDP

Size: Custom | Document Number: LA-9603P | Rev: 1.0

Date: Wednesday, January 09, 2013 | Sheet 14 of 62

WWW.AliSaler.Com

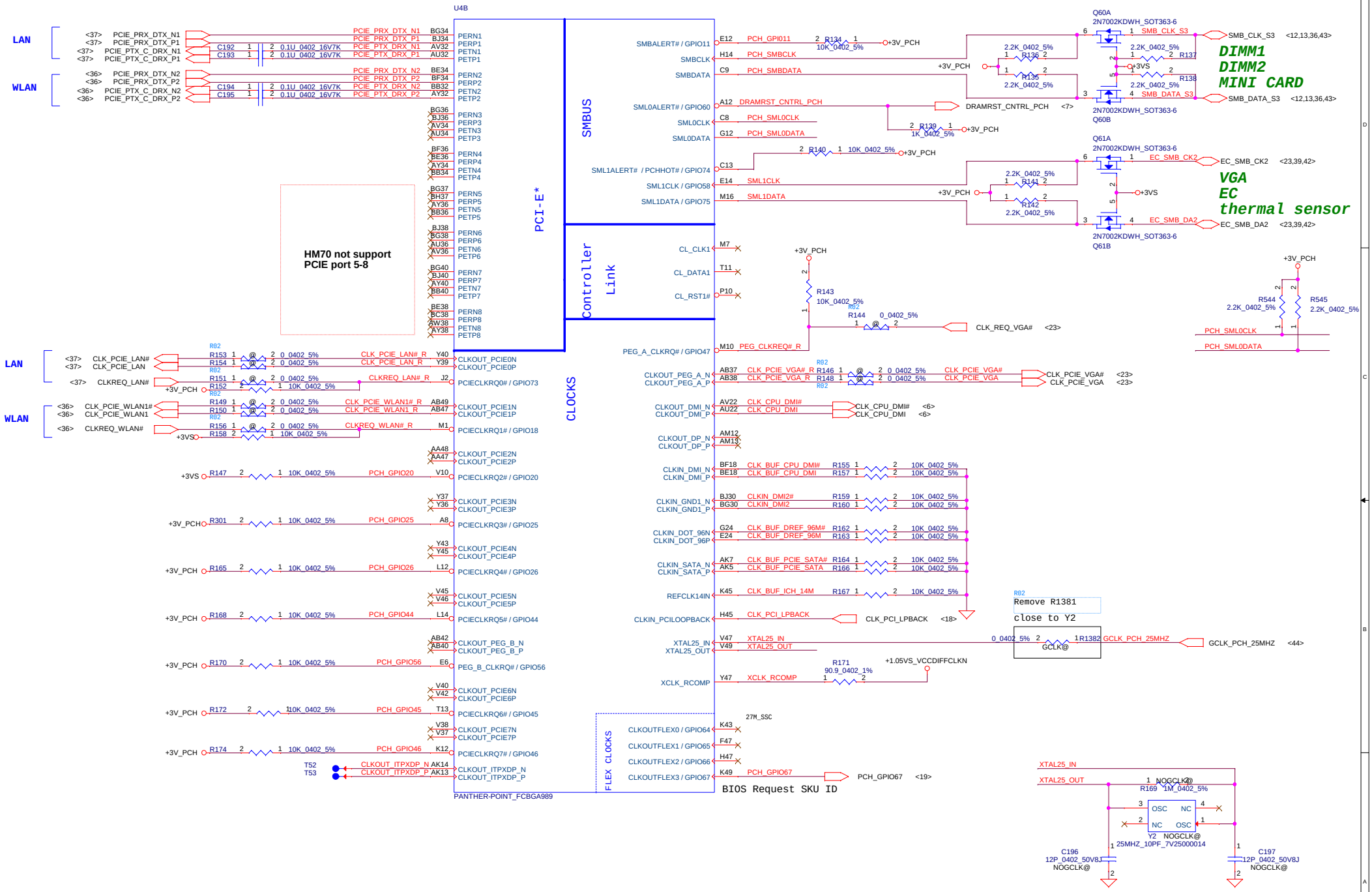

Security Classification	Compal Secret Data		
Issued Date	2012/12/26	Deciphered Date	2012/07/11

THIS SHEET OF ENGINEERING DRAWING IS THE PROPRIETARY PROPERTY OF COMPAL ELECTRONICS, INC. AND CONTAINS CONFIDENTIAL AND TRADE SECRET INFORMATION. THIS SHEET MAY NOT BE TRANSFERED FROM THE CUSTODY OF THE COMPETENT DIVISION OF R&D DEPARTMENT EXCEPT AS AUTHORIZED BY COMPAL ELECTRONICS, INC. NEITHER THIS SHEET NOR THE INFORMATION IT CONTAINS MAY BE USED BY OR DISCLOSED TO ANY THIRD PARTY WITHOUT PRIOR WRITTEN CONSENT OF COMPAL ELECTRONICS, INC.

Compal Electronics, Inc.

Title: PCH (2/9) PCIE, SMBUS, CLK

Size: Custom | Document Number: LA-9603P | Rev: 1.0

Date: Wednesday, January 09, 2013 | Sheet 15 of 62

WWW.AliSaler.Com

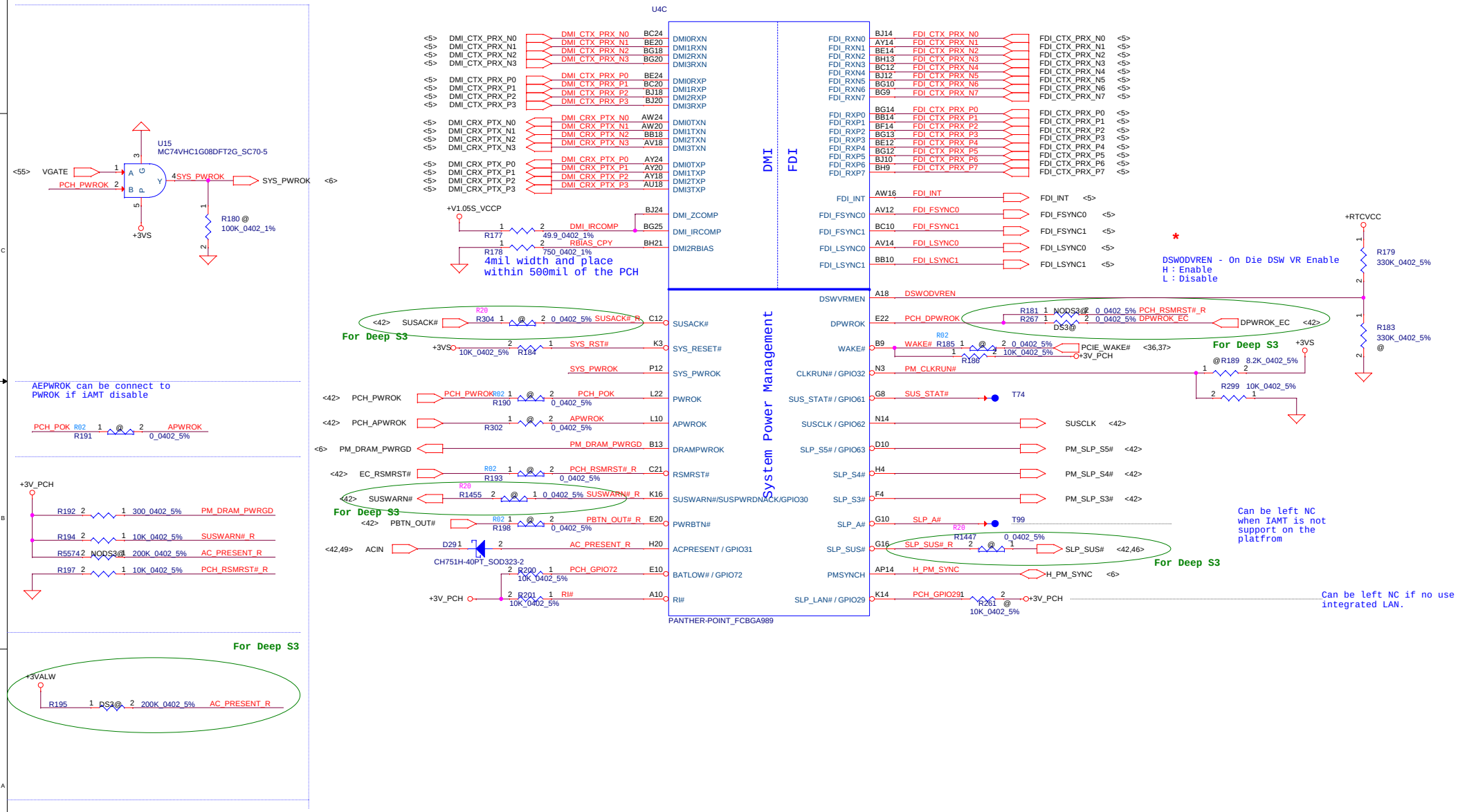

Security Classification	Compal Secret Data		
Issued Date	2012/12/26	Deciphered Date	2012/07/11

THIS SHEET OF ENGINEERING DRAWING IS THE PROPRIETARY PROPERTY OF COMPAL ELECTRONICS, INC. AND CONTAINS CONFIDENTIAL AND TRADE SECRET INFORMATION. THIS SHEET MAY NOT BE TRANSFERED FROM THE CUSTODY OF THE COMPETENT DIVISION OF R&D DEPARTMENT EXCEPT AS AUTHORIZED BY COMPAL ELECTRONICS, INC. NEITHER THIS SHEET NOR THE INFORMATION IT CONTAINS MAY BE USED BY OR DISCLOSED TO ANY THIRD PARTY WITHOUT PRIOR WRITTEN CONSENT OF COMPAL ELECTRONICS, INC.

Compal Electronics, Inc.

Title: PCH (3/9) DMI,FDI,PM,

Size: Custom | Document Number: LA-9603P | Rev: 1.0

Date: Wednesday, January 09, 2013 | Sheet 16 of 62

WWW.AliSaler.Com

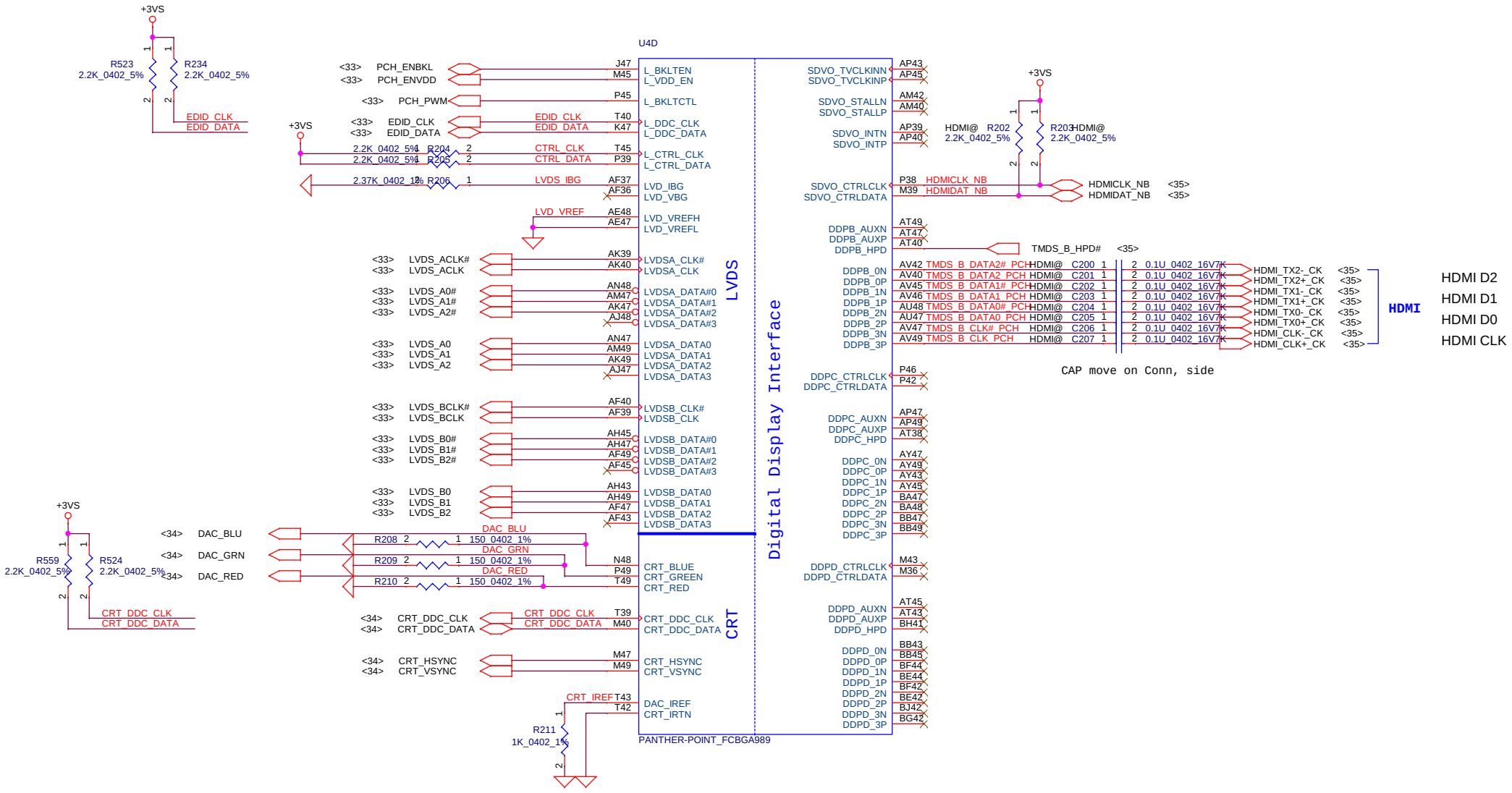

Security Classification	Compal Secret Data		
Issued Date	2012/12/26	Deciphered Date	2012/07/11

THIS SHEET OF ENGINEERING DRAWING IS THE PROPRIETARY PROPERTY OF COMPAL ELECTRONICS, INC. AND CONTAINS CONFIDENTIAL AND TRADE SECRET INFORMATION. THIS SHEET MAY NOT BE TRANSFERED FROM THE CUSTODY OF THE COMPETENT DIVISION OF R&D DEPARTMENT EXCEPT AS AUTHORIZED BY COMPAL ELECTRONICS, INC. NEITHER THIS SHEET NOR THE INFORMATION IT CONTAINS MAY BE USED BY OR DISCLOSED TO ANY THIRD PARTY WITHOUT PRIOR WRITTEN CONSENT OF COMPAL ELECTRONICS, INC.

Title: **PCH (4/9) LVDS,CRT,DP,HDMI**

Size: B | Document Number: **LA-9603P** | Rev: 1.0

Date: Wednesday, January 09, 2013 | Sheet 17 of 62

WWW.AliSaler.Com

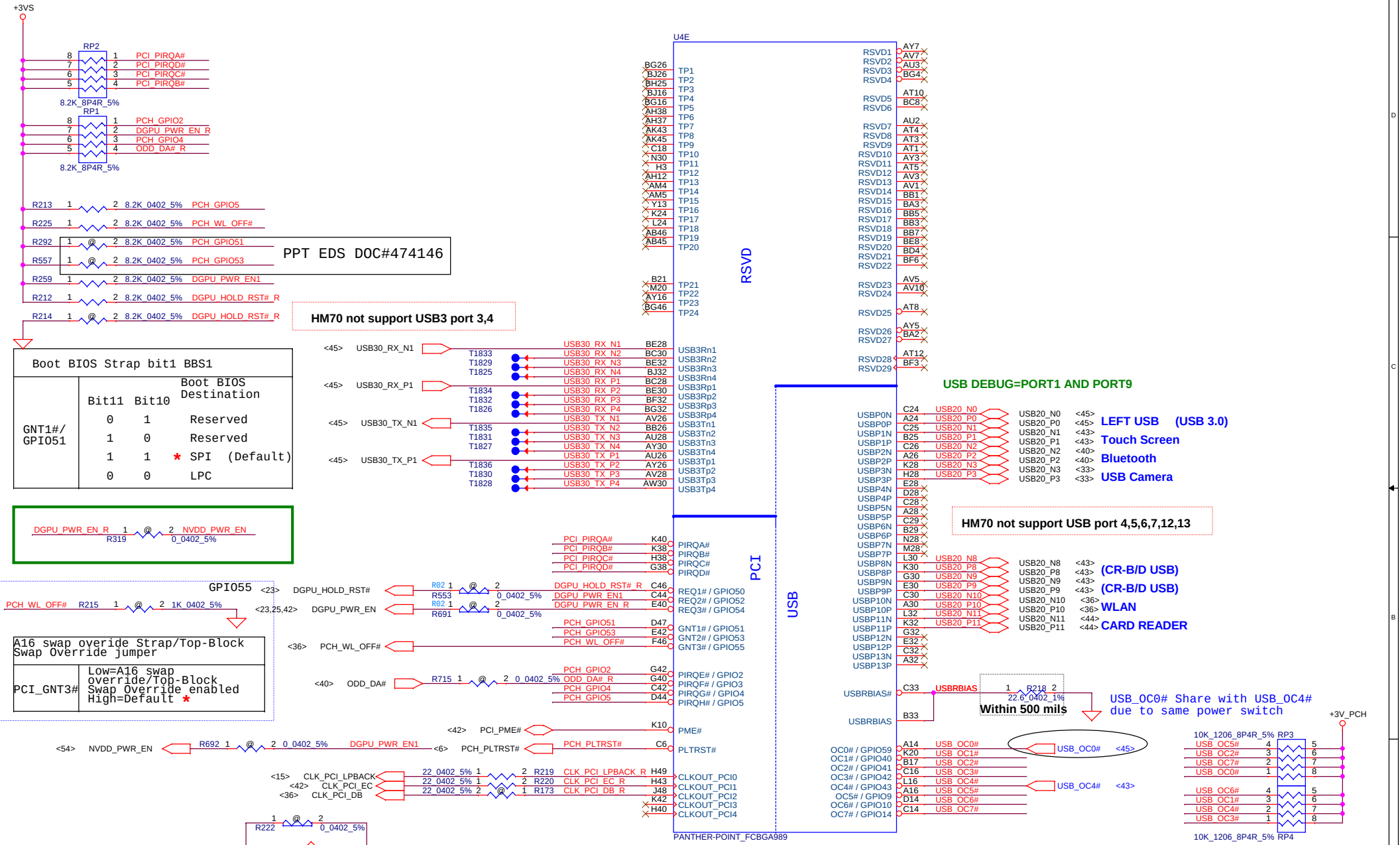

Security Classification	Compal Secret Data		
Issued Date	2012/12/26	Deciphered Date	2012/07/11

THIS SHEET OF ENGINEERING DRAWING IS THE PROPRIETARY PROPERTY OF COMPAL ELECTRONICS, INC. AND CONTAINS CONFIDENTIAL AND TRADE SECRET INFORMATION. THIS SHEET MAY NOT BE TRANSFERED FROM THE CUSTODY OF THE COMPETENT DIVISION OF R&D DEPARTMENT EXCEPT AS AUTHORIZED BY COMPAL ELECTRONICS, INC. NEITHER THIS SHEET NOR THE INFORMATION IT CONTAINS MAY BE USED BY OR DISCLOSED TO ANY THIRD PARTY WITHOUT PRIOR WRITTEN CONSENT OF COMPAL ELECTRONICS, INC.

Title: **PCH (5/9) PCI, USB**

Size: Custom | Document Number: **LA-9603P** | Rev: 1.0

Date: Wednesday, January 09, 2013 | Sheet 18 of 62

WWW.AliSaler.Com

PCH_GPIO69	Function
0	HM76 by PCH
1	HM70 by PCH

PCH_GPIO70	Function
0	UMA
1	N14P-GV2

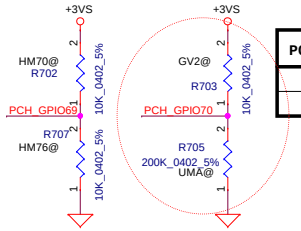

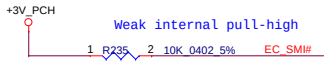

GPIO28
On-Die PLL Voltage Regulator
This signal has a weak internal pull up

* H : On-Die voltage regulator enable
L : On-Die PLL Voltage Regulator disable

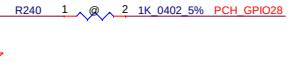

* Deep S4,S5 wake event signal
RTC alarm,Power BTN,GPIO27

PCH_GPIO27 (Have internal Pull-High)
Deep S4,S5 wake event signal

For DS3

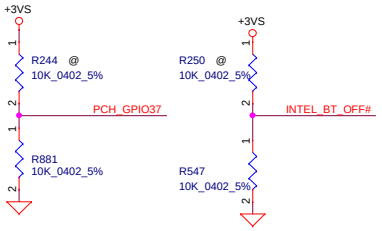

BIOS Request SKU ID

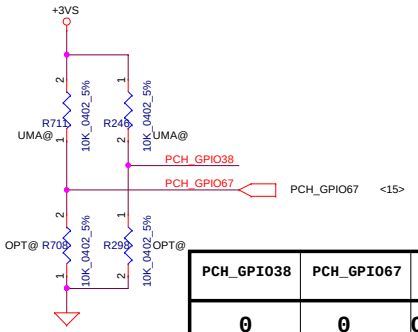

PCH_GPIO38	PCH_GPIO67	Function
0	0	Optimus
1	1	UMA

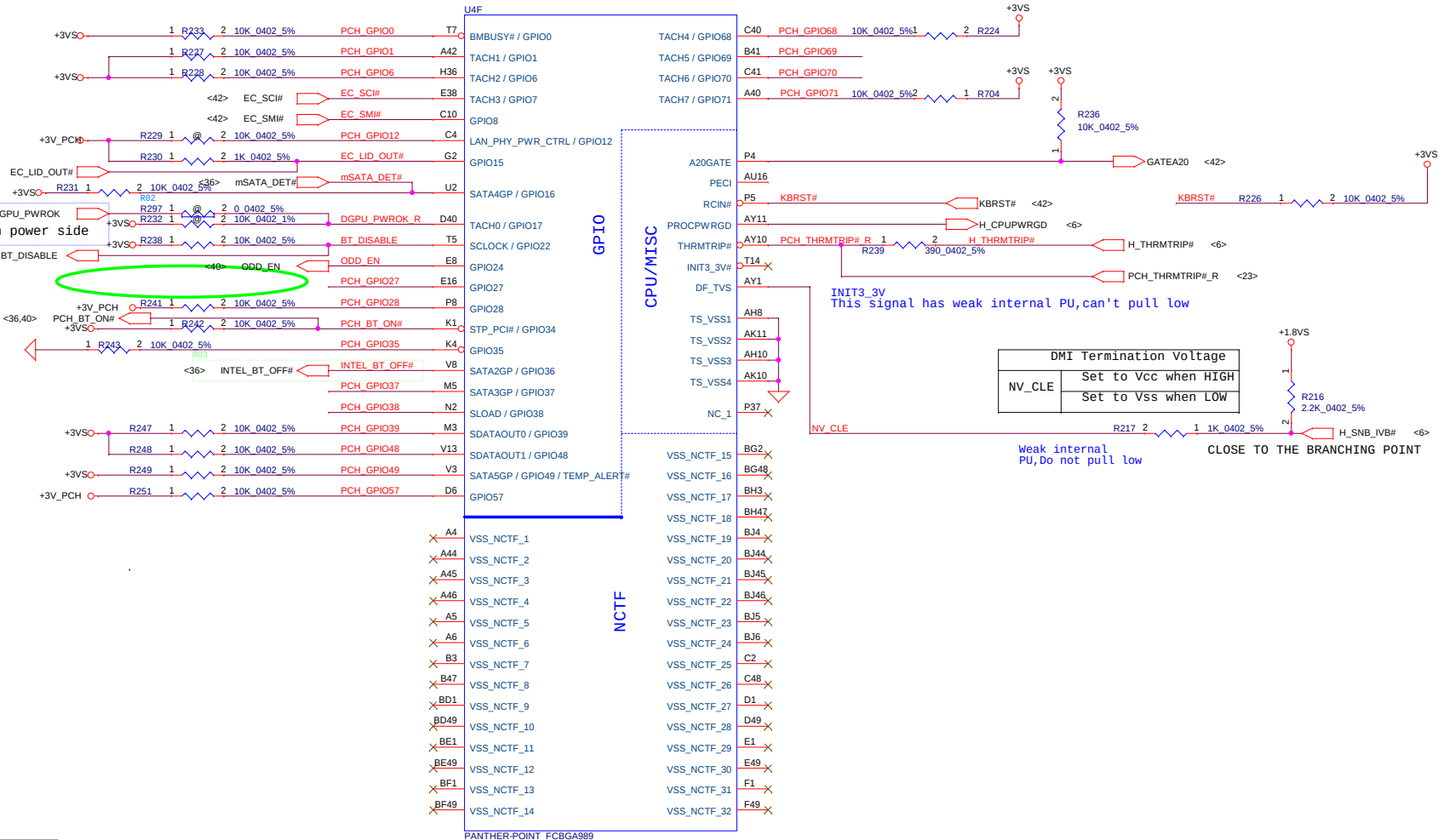

DMI Termination Voltage	
NV_CLE	Set to Vcc when HIGH
	Set to Vss when LOW

Security Classification	Compal Secret Data		
Issued Date	2012/12/26	Deciphered Date	2012/07/11

THIS SHEET OF ENGINEERING DRAWING IS THE PROPRIETARY PROPERTY OF COMPAL ELECTRONICS, INC. AND CONTAINS CONFIDENTIAL AND TRADE SECRET INFORMATION. THIS SHEET MAY NOT BE TRANSFERED FROM THE CUSTODY OF THE COMPETENT DIVISION OF R&D DEPARTMENT EXCEPT AS AUTHORIZED BY COMPAL ELECTRONICS, INC. NEITHER THIS SHEET NOR THE INFORMATION IT CONTAINS MAY BE USED BY OR DISCLOSED TO ANY THIRD PARTY WITHOUT PRIOR WRITTEN CONSENT OF COMPAL ELECTRONICS, INC.

Compal Electronics, Inc.

Title: PCH (6/9) GPIO, CPU, MISC

Size: Custom | Document Number: LA-9603P | Rev: 1.0

Date: Wednesday, January 09, 2013 | Sheet 19 of 62

WWW.AliSaler.Com

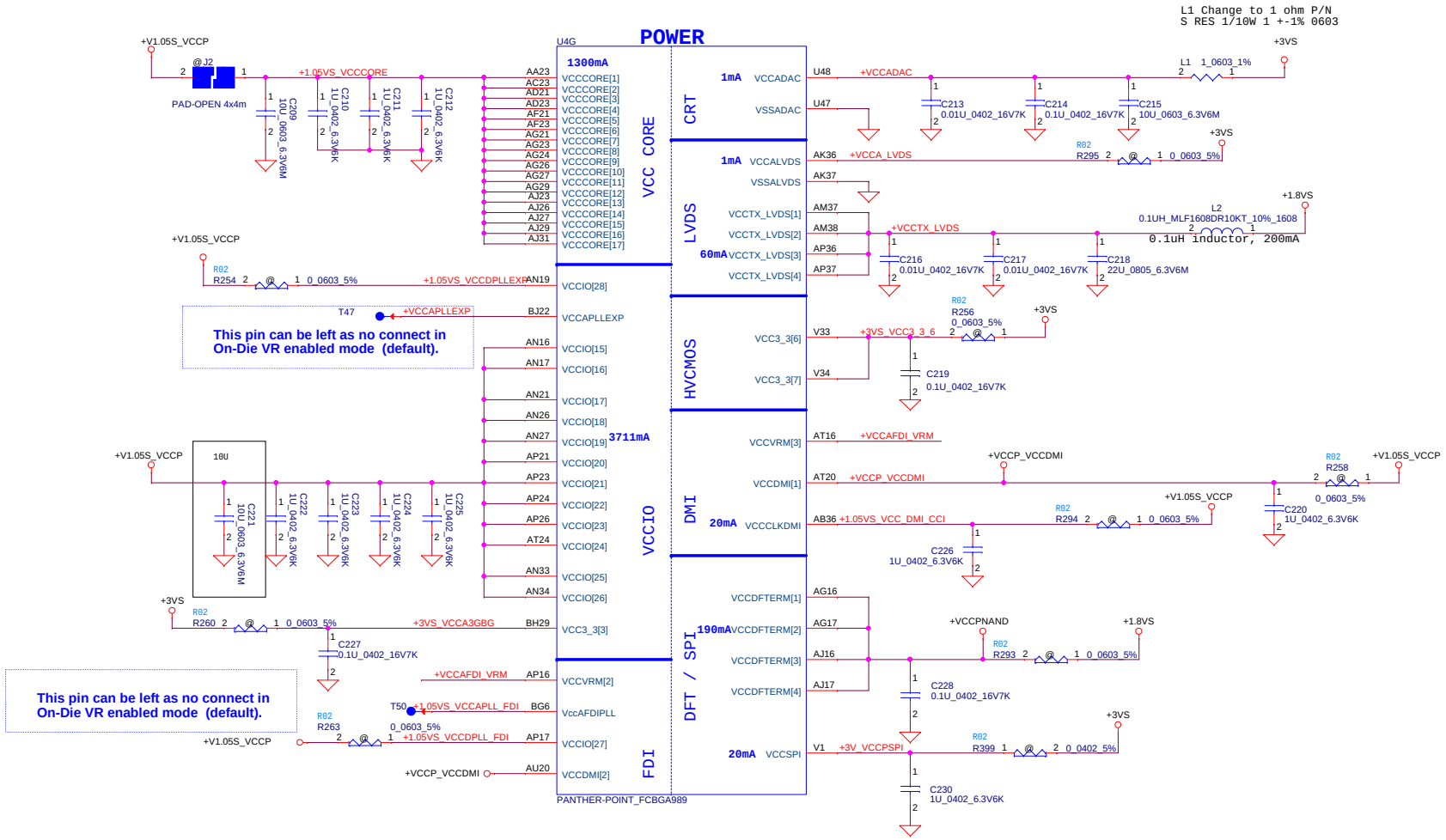

PCH Power Rail Table
Refer to CPU EDS R1.5

Voltage Rail	Voltage	S0 Iccmax Current (A)
V_PROC_IO	1.05	0.001
V5REF	5	0.001
V5REF_Sus	5	0.001
Vcc3_3	3.3	0.228
VccADAC	3.3	0.001
VccADPLLA	1.05	0.075
VccADPLLB	1.05	0.075
VccCore	1.05	1.3
VccDMI	1.05	0.042
VccIO	1.05	3.709
VccASW	1.05	0.903
VccSPI	3.3	0.01
VccDSW	3.3	0.001
VccDFTERM	1.8	0.002
VccRTC	3.3	6 uA
VccSus3_3	3.3	0.065
VccSusHDA	3.3 / 1.5	0.01
VccVRM	1.8 / 1.5	0.167
VccCLKDMI	1.05	0.075
VccSSC	1.05	0.095
VccDIFFCLKN	1.05	0.055
VccALVDS	3.3	0.001
VccTX_LVDS	1.8	0.04

Security Classification	Compal Secret Data		
Issued Date	2012/12/26	Deciphered Date	2012/07/11

THIS SHEET OF ENGINEERING DRAWING IS THE PROPRIETARY PROPERTY OF COMPAL ELECTRONICS, INC. AND CONTAINS CONFIDENTIAL AND TRADE SECRET INFORMATION. THIS SHEET MAY NOT BE TRANSFERED FROM THE CUSTODY OF THE COMPETENT DIVISION OF R&D DEPARTMENT EXCEPT AS AUTHORIZED BY COMPAL ELECTRONICS, INC. NEITHER THIS SHEET NOR THE INFORMATION IT CONTAINS MAY BE USED BY OR DISCLOSED TO ANY THIRD PARTY WITHOUT PRIOR WRITTEN CONSENT OF COMPAL ELECTRONICS, INC.

Compal Electronics, Inc.

Title: PCH (7/9) PWR

Size: Custom | Document Number: LA-9603P | Rev: 1.0

Date: Wednesday, January 09, 2013 | Sheet 20 of 62

WWW.AliSaler.Com

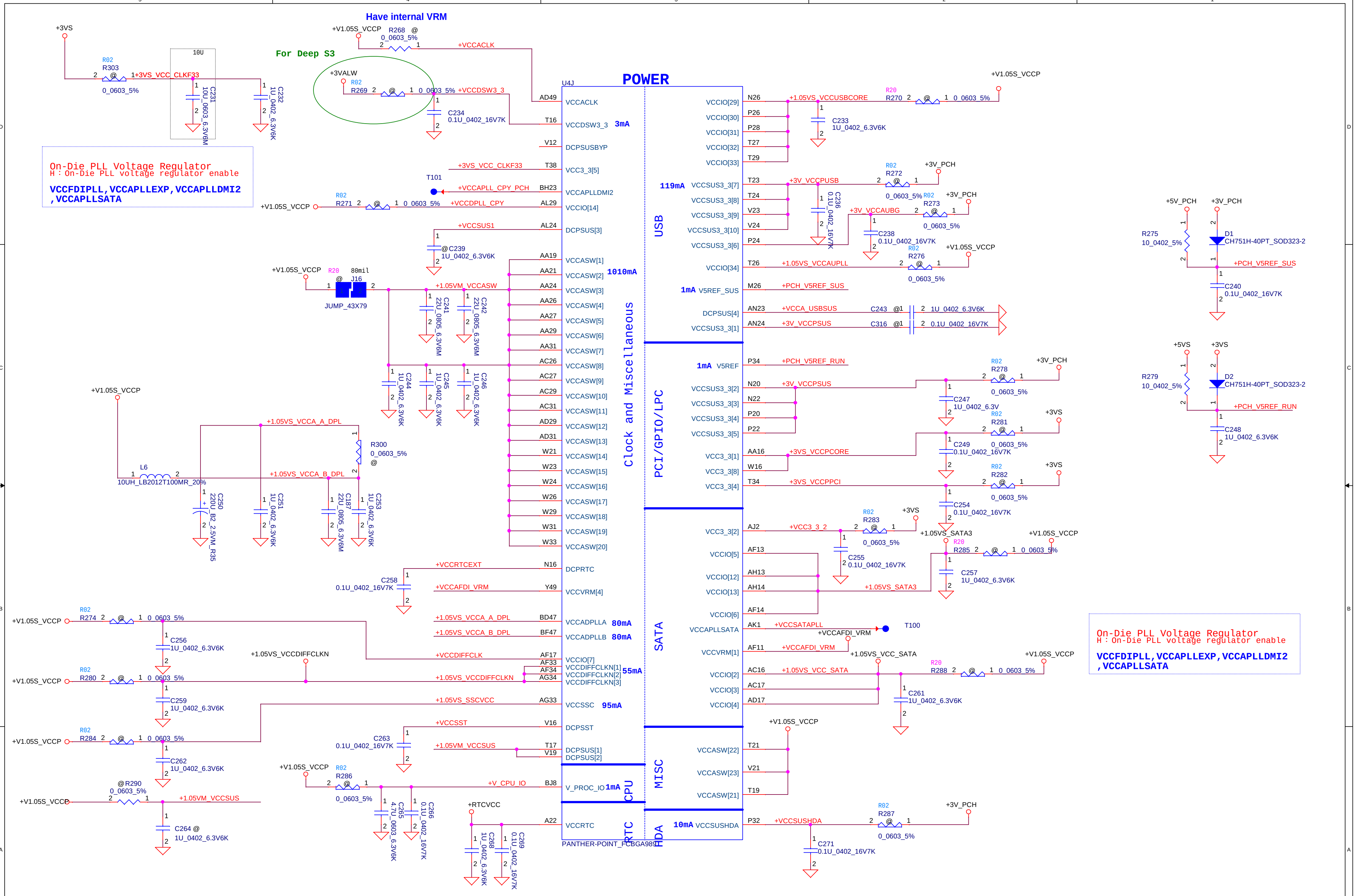

Security Classification	Compal Secret Data		
Issued Date	2012/12/26	Deciphered Date	2012/07/11

THIS SHEET OF ENGINEERING DRAWING IS THE PROPRIETARY PROPERTY OF COMPAL ELECTRONICS, INC. AND CONTAINS CONFIDENTIAL AND TRADE SECRET INFORMATION. THIS SHEET MAY NOT BE TRANSFERED FROM THE CUSTODY OF THE COMPETENT DIVISION OF R&D DEPARTMENT EXCEPT AS AUTHORIZED BY COMPAL ELECTRONICS, INC. NEITHER THIS SHEET NOR THE INFORMATION IT CONTAINS MAY BE USED BY OR DISCLOSED TO ANY THIRD PARTY WITHOUT PRIOR WRITTEN CONSENT OF COMPAL ELECTRONICS, INC.

Compal Electronics, Inc.

Title: **PCH (8/9) PWR**

Size: Custom | Document Number: **LA-9603P** | Rev: 1.0

Date: Wednesday, January 09, 2013 | Sheet 21 of 62

WWW.AliSaler.Com

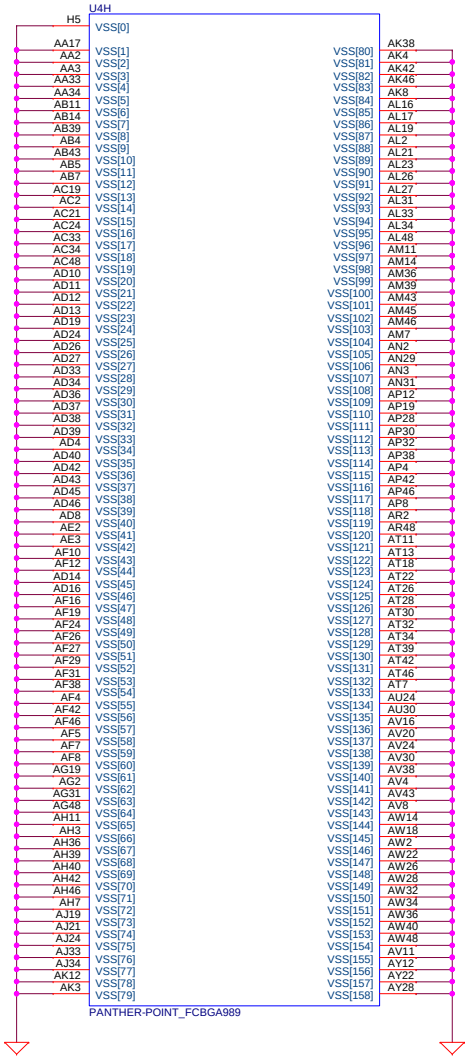

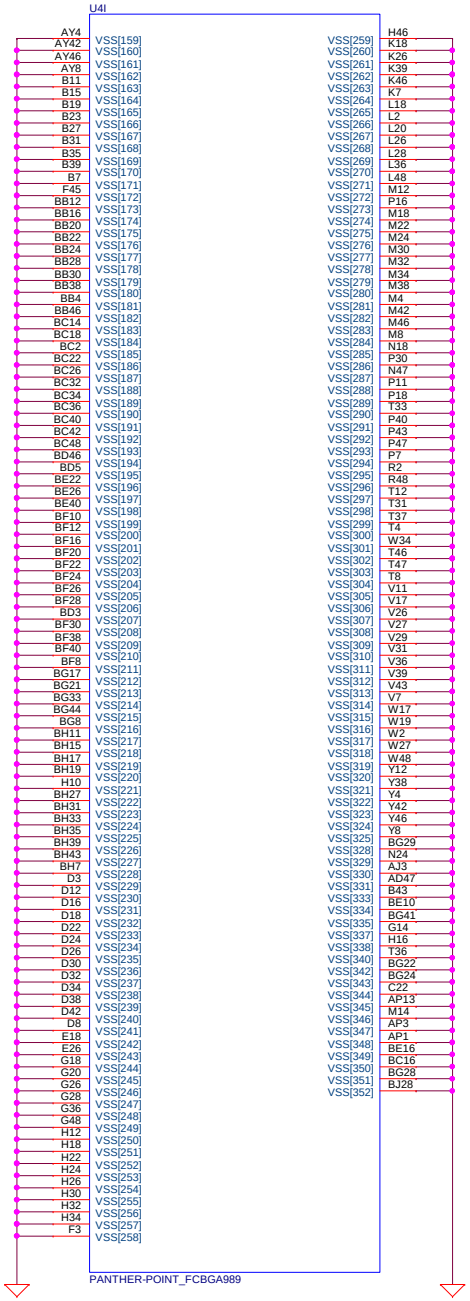

Security Classification	Compal Secret Data		
Issued Date	2012/12/26	Deciphered Date	2012/07/11

THIS SHEET OF ENGINEERING DRAWING IS THE PROPRIETARY PROPERTY OF COMPAL ELECTRONICS, INC. AND CONTAINS CONFIDENTIAL AND TRADE SECRET INFORMATION. THIS SHEET MAY NOT BE TRANSFERED FROM THE CUSTODY OF THE COMPETENT DIVISION OF R&D DEPARTMENT EXCEPT AS AUTHORIZED BY COMPAL ELECTRONICS, INC. NEITHER THIS SHEET NOR THE INFORMATION IT CONTAINS MAY BE USED BY OR DISCLOSED TO ANY THIRD PARTY WITHOUT PRIOR WRITTEN CONSENT OF COMPAL ELECTRONICS, INC.

Compal Electronics, Inc.

Title: PCH (9/9) VSS

Size: Custom | Document Number: LA-9603P | Rev: 1.0

Date: Wednesday, January 09, 2013 | Sheet 22 of 62

WWW.AliSaler.Com

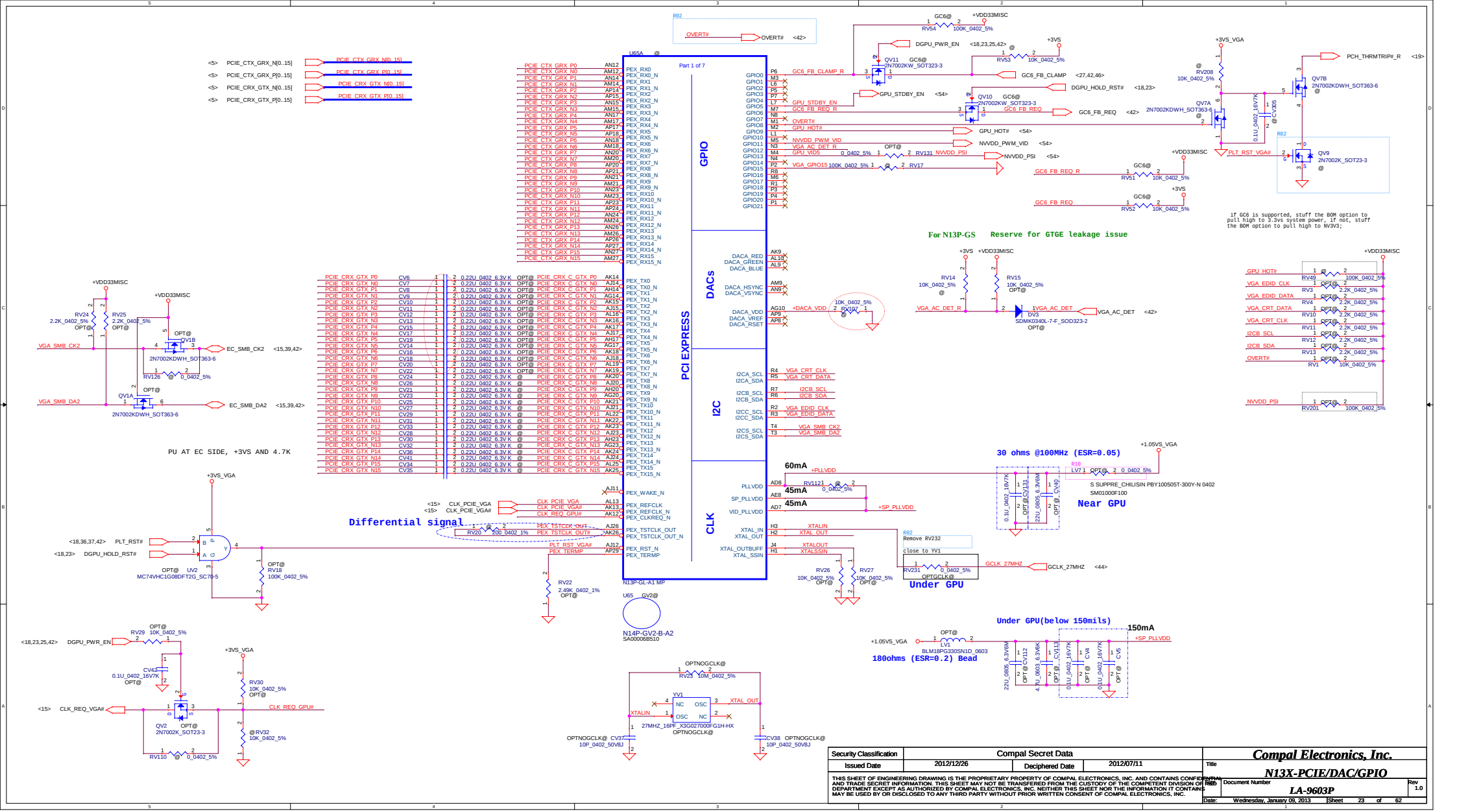

Security Classification	Compal Secret Data		
Issued Date	2012/12/26	Deciphered Date	2012/07/11

THIS SHEET OF ENGINEERING DRAWING IS THE PROPRIETARY PROPERTY OF COMPAL ELECTRONICS, INC. AND CONTAINS CONFIDENTIAL AND TRADE SECRET INFORMATION. THIS SHEET MAY NOT BE TRANSFERED FROM THE CUSTODY OF THE COMPETENT DIVISION OR R&D DEPARTMENT EXCEPT AS AUTHORIZED BY COMPAL ELECTRONICS, INC. NEITHER THIS SHEET NOR THE INFORMATION IT CONTAINS MAY BE USED BY OR DISCLOSED TO ANY THIRD PARTY WITHOUT PRIOR WRITTEN CONSENT OF COMPAL ELECTRONICS, INC.

Compal Electronics, Inc.

Title: **N13X-PCIE/DAC/GPIO**

Document Number: **LA-9603P** Rev: 1.0

Date: Wednesday, January 09, 2013 Sheet 23 of 62

WWW.AliSaler.Com

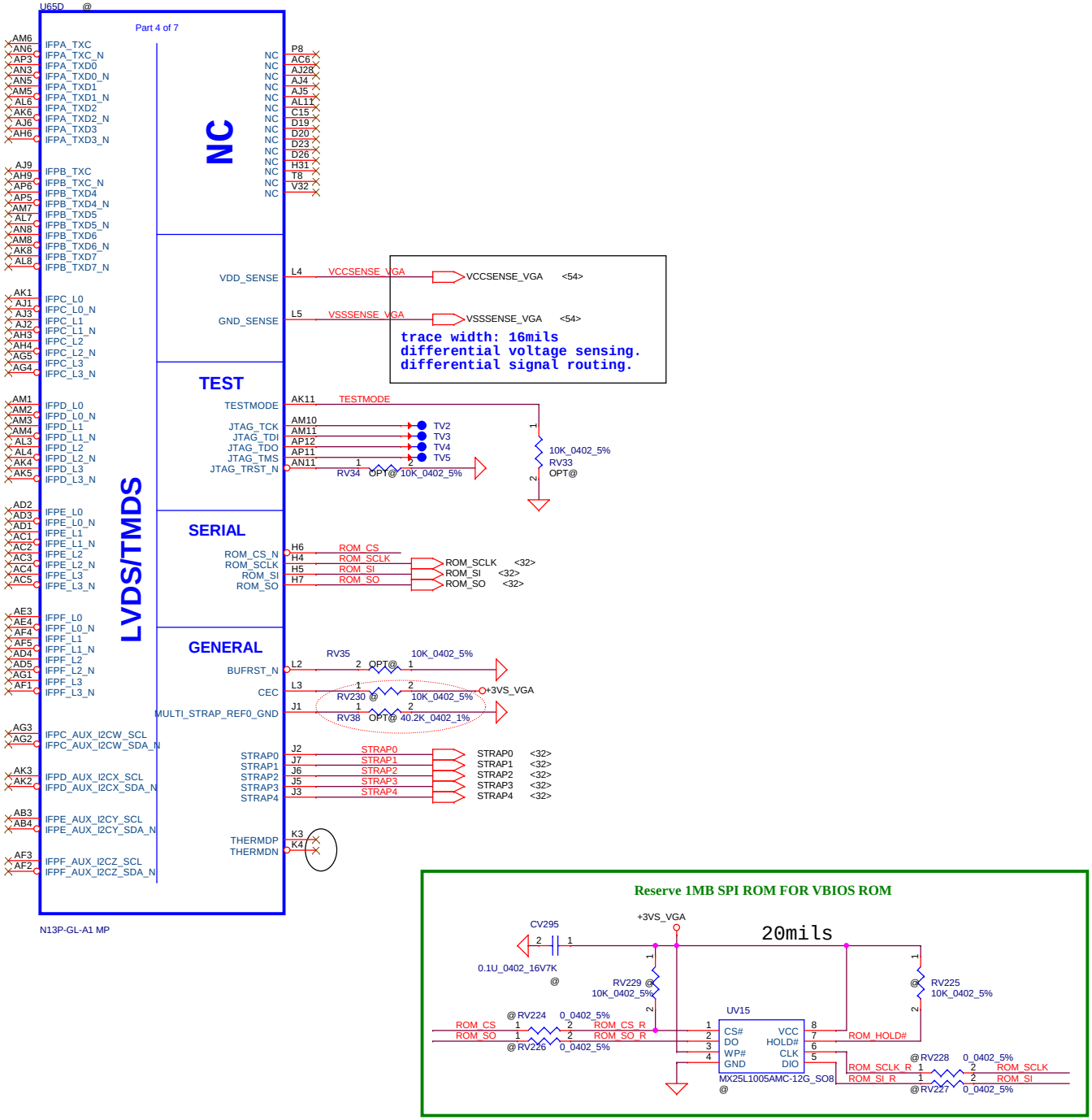

Security Classification	Compal Secret Data		
Issued Date	2012/12/26	Deciphered Date	2012/07/11

THIS SHEET OF ENGINEERING DRAWING IS THE PROPRIETARY PROPERTY OF COMPAL ELECTRONICS, INC. AND CONTAINS CONFIDENTIAL AND TRADE SECRET INFORMATION. THIS SHEET MAY NOT BE TRANSFERED FROM THE CUSTODY OF THE COMPETENT DIVISION OF R&D DEPARTMENT EXCEPT AS AUTHORIZED BY COMPAL ELECTRONICS, INC. NEITHER THIS SHEET NOR THE INFORMATION IT CONTAINS MAY BE USED BY OR DISCLOSED TO ANY THIRD PARTY WITHOUT PRIOR WRITTEN CONSENT OF COMPAL ELECTRONICS, INC.

Compal Electronics, Inc.

Title: **N13X-LVDS/HDMI/DP/THM**

Size | Document Number: **LA-9603P** | Rev: 1.0

Date: Wednesday, January 09, 2013 | Sheet 24 of 62

WWW.AliSaler.Com

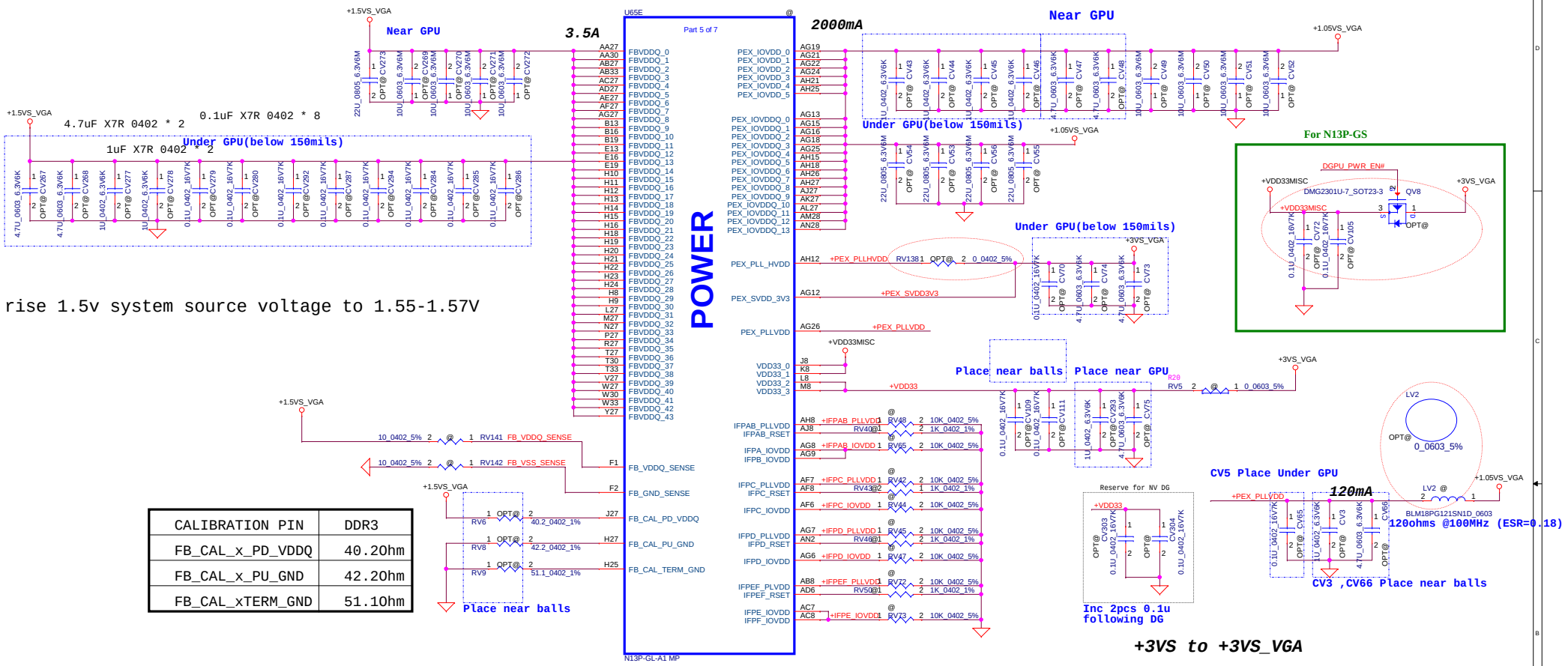

CALIBRATION PIN	DDR3
FB_CAL_x_PD_VDDQ	40.2Ohm
FB_CAL_x_PU_GND	42.2Ohm
FB_CAL_xTERM_GND	51.1Ohm

Security Classification	Compal Secret Data		
Issued Date	2012/12/26	Deciphered Date	2012/07/11

THIS SHEET OF ENGINEERING DRAWING IS THE PROPRIETARY PROPERTY OF COMPAL ELECTRONICS, INC. AND CONTAINS CONFIDENTIAL AND TRADE SECRET INFORMATION. THIS SHEET MAY NOT BE TRANSFERRED FROM THE CUSTODY OF THE COMPETENT DIVISION OF R&D DEPARTMENT EXCEPT AS AUTHORIZED BY COMPAL ELECTRONICS, INC. NEITHER THIS SHEET NOR THE INFORMATION IT CONTAINS MAY BE USED BY OR DISCLOSED TO ANY THIRD PARTY WITHOUT PRIOR WRITTEN CONSENT OF COMPAL ELECTRONICS, INC.

Compal Electronics, Inc.

Title: **N13X-POWER**

Size | Document Number: **LA-9603P** | Rev: 1.0

Date: Wednesday, January 09, 2013 | Sheet 25 of 62

WWW.AliSaler.Com

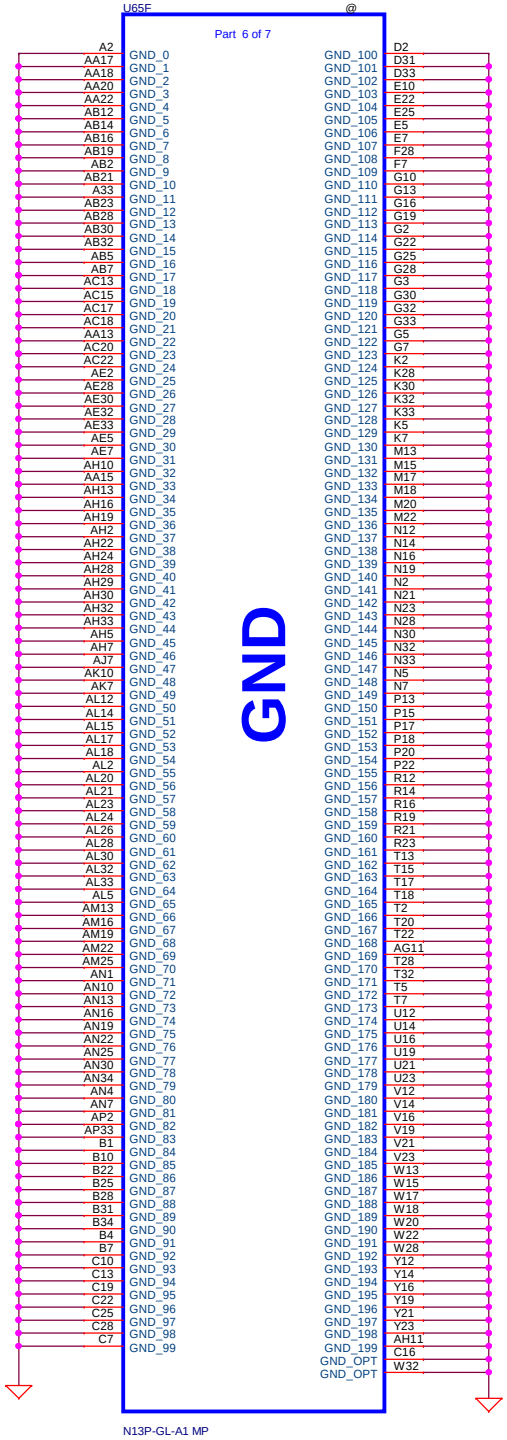

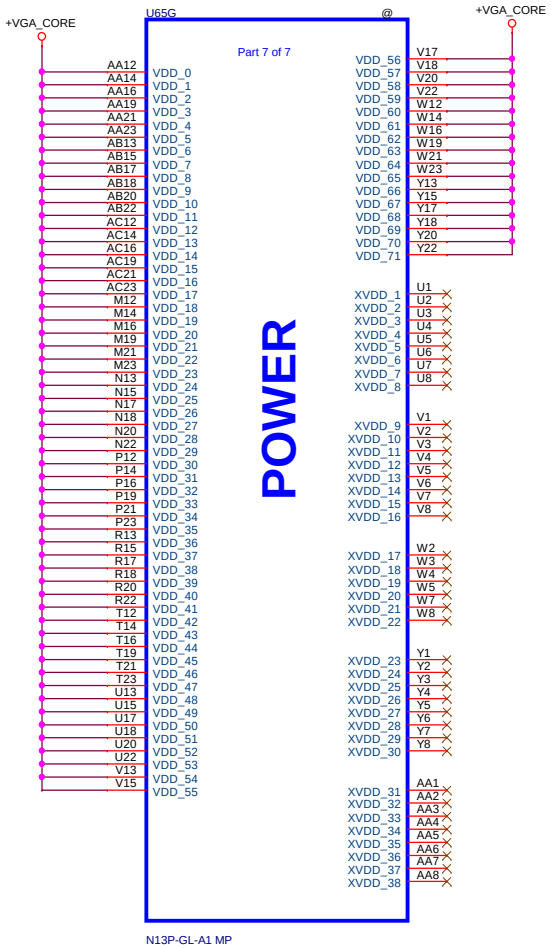

Security Classification	Compal Secret Data		
Issued Date	2012/12/26	Deciphered Date	2012/07/11

THIS SHEET OF ENGINEERING DRAWING IS THE PROPRIETARY PROPERTY OF COMPAL ELECTRONICS, INC. AND CONTAINS CONFIDENTIAL AND TRADE SECRET INFORMATION. THIS SHEET MAY NOT BE TRANSFERED FROM THE CUSTODY OF THE COMPETENT DIVISION OF R&D DEPARTMENT EXCEPT AS AUTHORIZED BY COMPAL ELECTRONICS, INC. NEITHER THIS SHEET NOR THE INFORMATION IT CONTAINS MAY BE USED BY OR DISCLOSED TO ANY THIRD PARTY WITHOUT PRIOR WRITTEN CONSENT OF COMPAL ELECTRONICS, INC.

Compal Electronics, Inc.

Title: **N13-VGA CORE, GND**

Size | Document Number: **LA-9603P** | Rev: 1.0

Date: Wednesday, January 09, 2013 | Sheet 26 of 62

WWW.AliSaler.Com

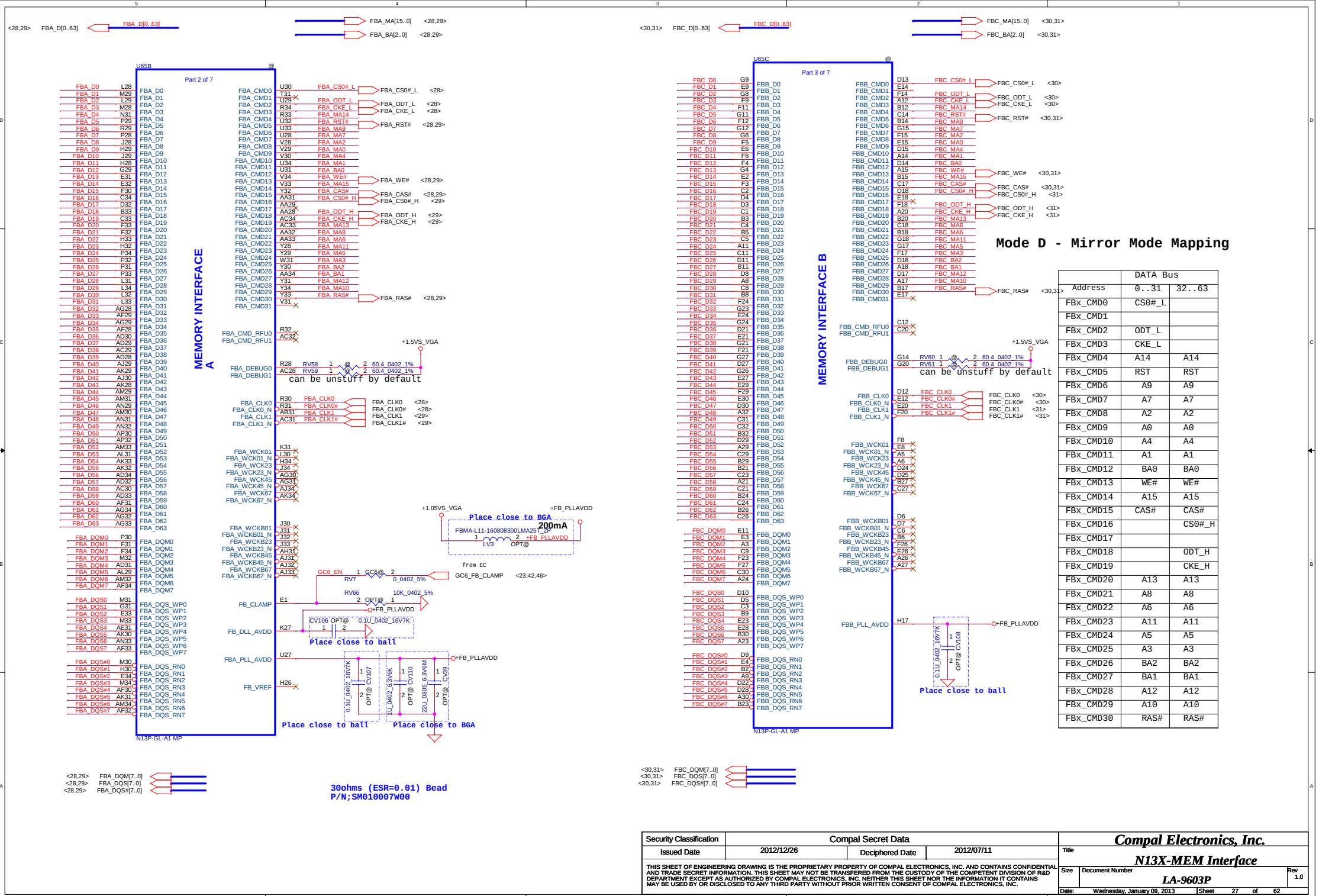

Mode D - Mirror Mode Mapping

Address	DATA Bus 0..31	DATA Bus 32..63
FBx_CMD0	CS0#_L	
FBx_CMD1		
FBx_CMD2	ODT_L	
FBx_CMD3	CKE_L	
FBx_CMD4	A14	A14
FBx_CMD5	RST	RST
FBx_CMD6	A9	A9
FBx_CMD7	A7	A7
FBx_CMD8	A2	A2
FBx_CMD9	A0	A0
FBx_CMD10	A4	A4
FBx_CMD11	A1	A1
FBx_CMD12	BA0	BA0
FBx_CMD13	WE#	WE#
FBx_CMD14	A15	A15
FBx_CMD15	CAS#	CAS#
FBx_CMD16		CS0#_H
FBx_CMD17		
FBx_CMD18		ODT_H
FBx_CMD19		CKE_H
FBx_CMD20	A13	A13
FBx_CMD21	A8	A8
FBx_CMD22	A6	A6
FBx_CMD23	A11	A11
FBx_CMD24	A5	A5
FBx_CMD25	A3	A3
FBx_CMD26	BA2	BA2
FBx_CMD27	BA1	BA1
FBx_CMD28	A12	A12
FBx_CMD29	A10	A10
FBx_CMD30	RAS#	RAS#

Security Classification	Compal Secret Data		
Issued Date	2012/12/26	Deciphered Date	2012/07/11

THIS SHEET OF ENGINEERING DRAWING IS THE PROPRIETARY PROPERTY OF COMPAL ELECTRONICS, INC. AND CONTAINS CONFIDENTIAL AND TRADE SECRET INFORMATION. THIS SHEET MAY NOT BE TRANSFERED FROM THE CUSTODY OF THE COMPETENT DIVISION OF R&D DEPARTMENT EXCEPT AS AUTHORIZED BY COMPAL ELECTRONICS, INC. NEITHER THIS SHEET NOR THE INFORMATION IT CONTAINS MAY BE USED BY OR DISCLOSED TO ANY THIRD PARTY WITHOUT PRIOR WRITTEN CONSENT OF COMPAL ELECTRONICS, INC.

Compal Electronics, Inc.

Title: **N13X-MEM Interface**

Size | Document Number: **LA-9603P** | Rev 1.0

Date: Wednesday, January 09, 2013 | Sheet 27 of 62

WWW.AliSaler.Com

Memory Partition A - Lower 32 bits

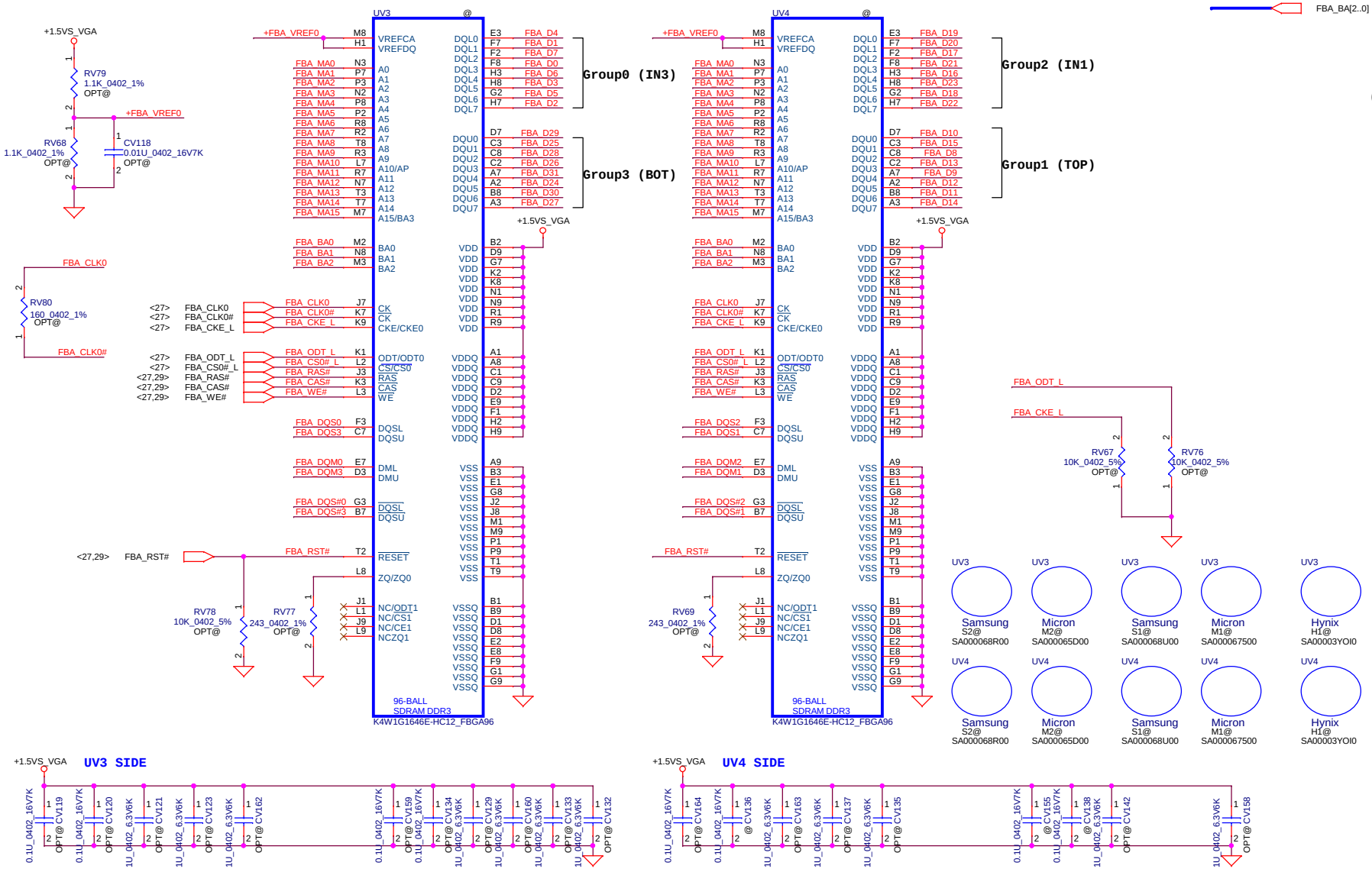

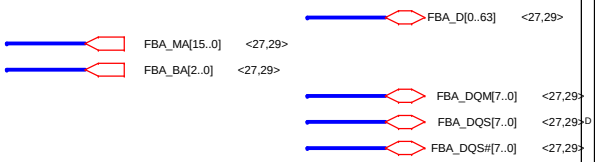

CMD mapping mod Mode D

	DATA Bus	
Address	0..31	32..63
FBx_CMD0	CS0#_L	
FBx_CMD1		
FBx_CMD2	ODT_L	
FBx_CMD3	CKE_L	
FBx_CMD4	A14	A14
FBx_CMD5	RST	RST
FBx_CMD6	A9	A9
FBx_CMD7	A7	A7
FBx_CMD8	A2	A2
FBx_CMD9	A0	A0
FBx_CMD10	A4	A4
FBx_CMD11	A1	A1
FBx_CMD12	BA0	BA0
FBx_CMD13	WE#	WE#
FBx_CMD14	A15	A15
FBx_CMD15	CAS#	CAS#
FBx_CMD16		CS0#_H
FBx_CMD17		
FBx_CMD18		ODT_H
FBx_CMD19		CKE_H
FBx_CMD20	A13	A13
FBx_CMD21	A8	A8
FBx_CMD22	A6	A6
FBx_CMD23	A11	A11
FBx_CMD24	A5	A5
FBx_CMD25	A3	A3
FBx_CMD26	BA2	BA2
FBx_CMD27	BA1	BA1
FBx_CMD28	A12	A12
FBx_CMD29	A10	A10
FBx_CMD30	RAS#	RAS#

Security Classification	Compal Secret Data		
Issued Date	2012/12/26	Deciphered Date	2012/07/11

THIS SHEET OF ENGINEERING DRAWING IS THE PROPRIETARY PROPERTY OF COMPAL ELECTRONICS, INC. AND CONTAINS CONFIDENTIAL AND TRADE SECRET INFORMATION. THIS SHEET MAY NOT BE TRANSFERED FROM THE CUSTODY OF THE COMPETENT DIVISION OF R&D DEPARTMENT EXCEPT AS AUTHORIZED BY COMPAL ELECTRONICS, INC. NEITHER THIS SHEET NOR THE INFORMATION IT CONTAINS MAY BE USED BY OR DISCLOSED TO ANY THIRD PARTY WITHOUT PRIOR WRITTEN CONSENT OF COMPAL ELECTRONICS, INC.

Compal Electronics, Inc.

Title: N13X-VRAM A Lower

Size | Document Number: LA-9603P | Rev 1.0

Date: Wednesday, January 09, 2013 | Sheet 28 of 62

WWW.AliSaler.Com

Memory Partition A - Upper 32 bits

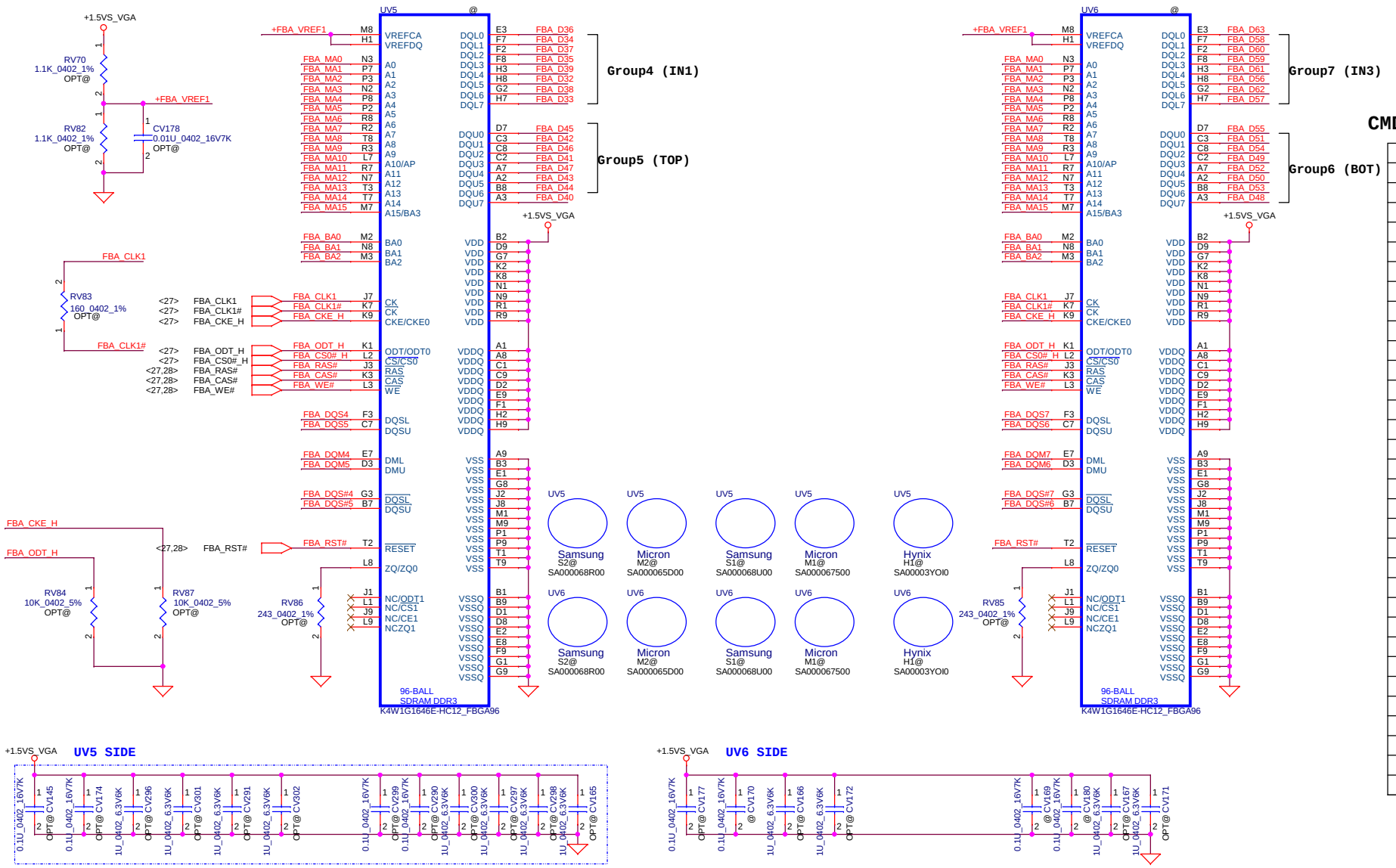

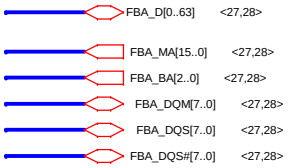

CMD mapping mod Mode D

	DATA Bus	
Address	0..31	32..63
FBx_CMD0	CS0#_L	
FBx_CMD1		
FBx_CMD2	ODT_L	
FBx_CMD3	CKE_L	
FBx_CMD4	A14	A14
FBx_CMD5	RST	RST
FBx_CMD6	A9	A9
FBx_CMD7	A7	A7
FBx_CMD8	A2	A2
FBx_CMD9	A0	A0
FBx_CMD10	A4	A4
FBx_CMD11	A1	A1
FBx_CMD12	BA0	BA0
FBx_CMD13	WE#	WE#
FBx_CMD14	A15	A15
FBx_CMD15	CAS#	CAS#
FBx_CMD16		CS0#_H
FBx_CMD17		
FBx_CMD18		ODT_H
FBx_CMD19		CKE_H
FBx_CMD20	A13	A13
FBx_CMD21	A8	A8
FBx_CMD22	A6	A6
FBx_CMD23	A11	A11
FBx_CMD24	A5	A5
FBx_CMD25	A3	A3
FBx_CMD26	BA2	BA2
FBx_CMD27	BA1	BA1
FBx_CMD28	A12	A12
FBx_CMD29	A10	A10
FBx_CMD30	RAS#	RAS#

Security Classification	Compal Secret Data		
Issued Date	2012/12/26	Deciphered Date	2012/07/11

THIS SHEET OF ENGINEERING DRAWING IS THE PROPRIETARY PROPERTY OF COMPAL ELECTRONICS, INC. AND CONTAINS CONFIDENTIAL AND TRADE SECRET INFORMATION. THIS SHEET MAY NOT BE TRANSFERED FROM THE CUSTODY OF THE COMPETENT DIVISION OF R&D DEPARTMENT EXCEPT AS AUTHORIZED BY COMPAL ELECTRONICS, INC. NEITHER THIS SHEET NOR THE INFORMATION IT CONTAINS MAY BE USED BY OR DISCLOSED TO ANY THIRD PARTY WITHOUT PRIOR WRITTEN CONSENT OF COMPAL ELECTRONICS, INC.

Compal Electronics, Inc.

Title: **N13X-VRAM A Upper**

Size: | Document Number: **LA-9603P** | Rev: 1.0

Date: Wednesday, January 09, 2013 | Sheet 29 of 62

WWW.AliSaler.Com

Memory Partition C - Lower 32 bits

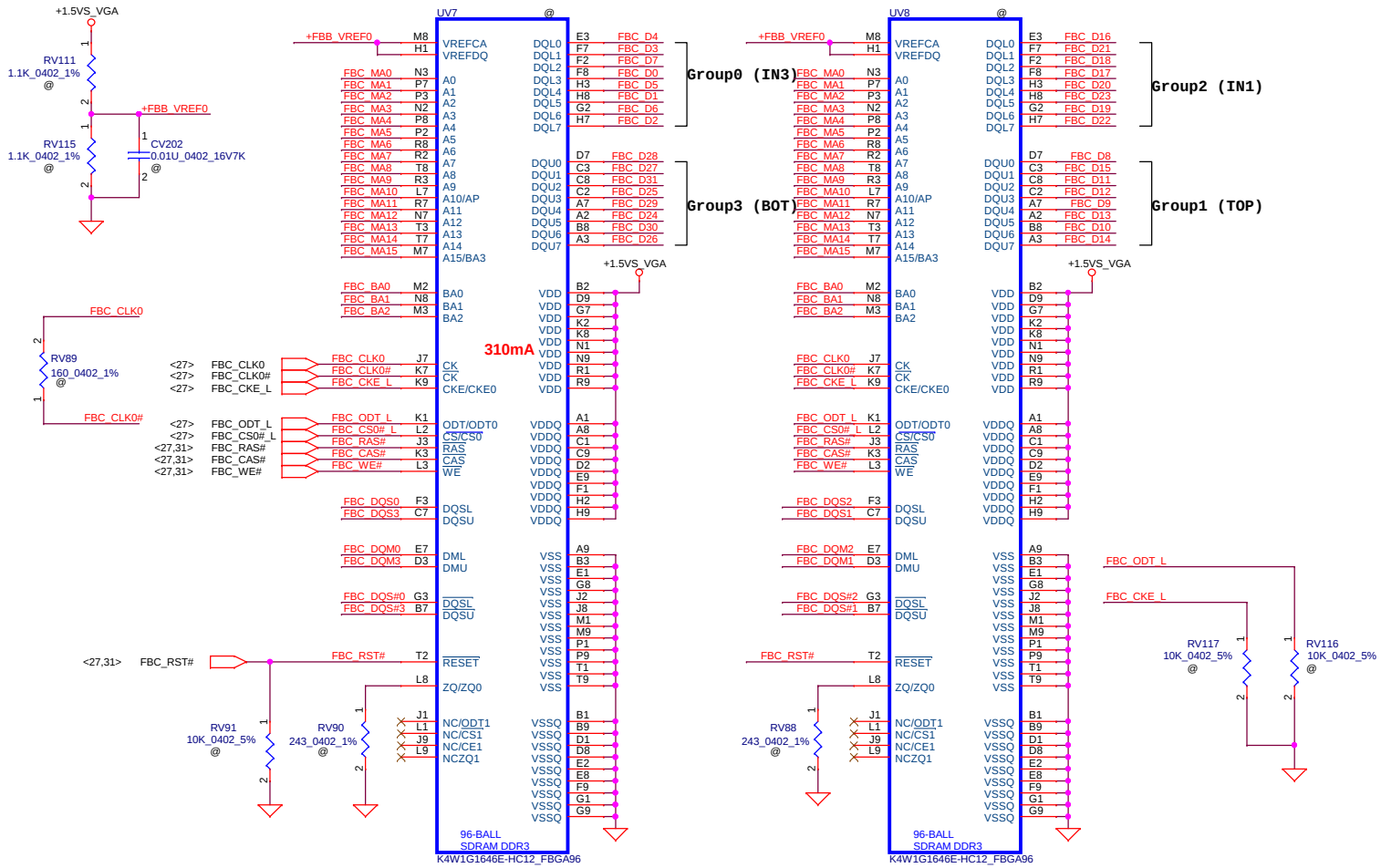

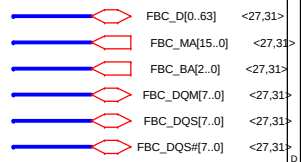

CMD mapping mod Mode D

	DATA Bus	
Address	0..31	32..63
FBx_CMD0	CS0#_L	
FBx_CMD1		
FBx_CMD2	ODT_L	
FBx_CMD3	CKE_L	
FBx_CMD4	A14	A14
FBx_CMD5	RST	RST
FBx_CMD6	A9	A9
FBx_CMD7	A7	A7
FBx_CMD8	A2	A2
FBx_CMD9	A0	A0
FBx_CMD10	A4	A4
FBx_CMD11	A1	A1
FBx_CMD12	BA0	BA0
FBx_CMD13	WE#	WE#
FBx_CMD14	A15	A15
FBx_CMD15	CAS#	CAS#
FBx_CMD16		CS0#_H
FBx_CMD17		
FBx_CMD18		ODT_H
FBx_CMD19		CKE_H
FBx_CMD20	A13	A13
FBx_CMD21	A8	A8
FBx_CMD22	A6	A6
FBx_CMD23	A11	A11
FBx_CMD24	A5	A5
FBx_CMD25	A3	A3
FBx_CMD26	BA2	BA2
FBx_CMD27	BA1	BA1
FBx_CMD28	A12	A12
FBx_CMD29	A10	A10
FBx_CMD30	RAS#	RAS#

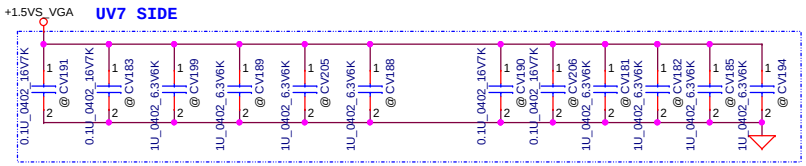

Security Classification	Compal Secret Data		
Issued Date	2012/12/26	Deciphered Date	2012/07/11

THIS SHEET OF ENGINEERING DRAWING IS THE PROPRIETARY PROPERTY OF COMPAL ELECTRONICS, INC. AND CONTAINS CONFIDENTIAL AND TRADE SECRET INFORMATION. THIS SHEET MAY NOT BE TRANSFERED FROM THE CUSTODY OF THE COMPETENT DIVISION OF R&D DEPARTMENT EXCEPT AS AUTHORIZED BY COMPAL ELECTRONICS, INC. NEITHER THIS SHEET NOR THE INFORMATION IT CONTAINS MAY BE USED BY OR DISCLOSED TO ANY THIRD PARTY WITHOUT PRIOR WRITTEN CONSENT OF COMPAL ELECTRONICS, INC.

Compal Electronics, Inc.

Title: N13X-VRAM C Lower

Size: Custom | Document Number: LA-9603P | Rev: 1.0

Date: Wednesday, January 09, 2013 | Sheet 30 of 62

WWW.AliSaler.Com

Memory Partition C - Upper 32 bits

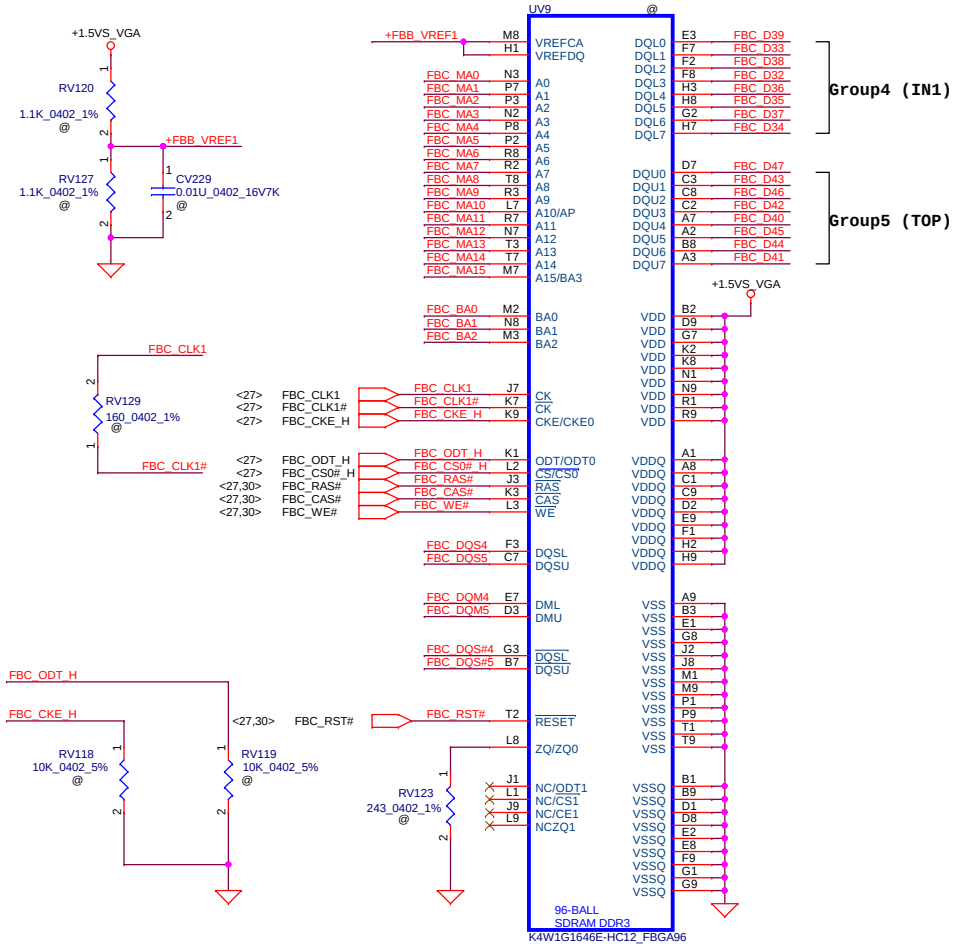

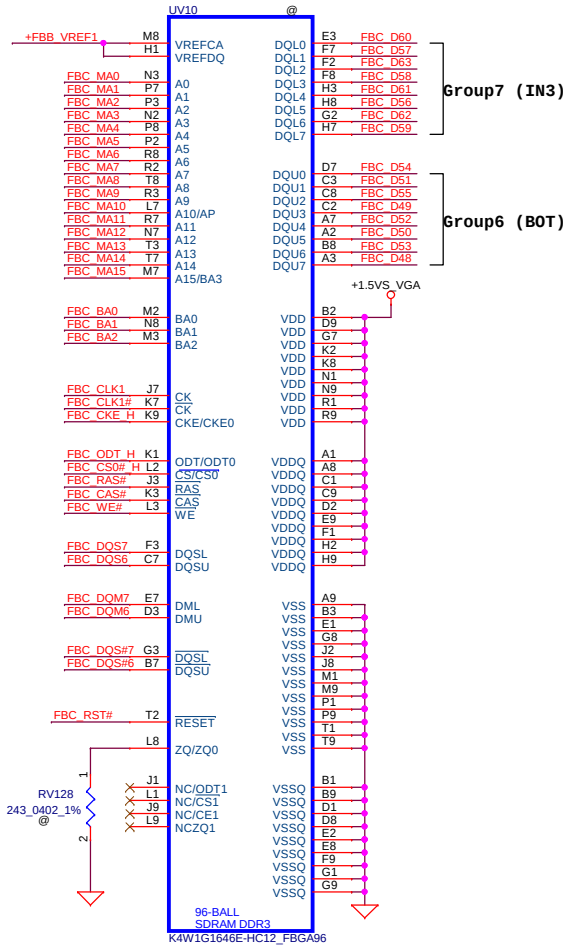

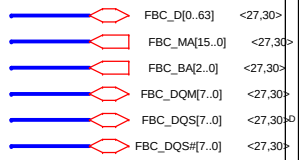

CMD mapping mod Mode D

	DATA Bus	
Address	0..31	32..63
FBx_CMD0	CS0#_L	
FBx_CMD1		
FBx_CMD2	ODT_L	
FBx_CMD3	CKE_L	
FBx_CMD4	A14	A14
FBx_CMD5	RST	RST
FBx_CMD6	A9	A9
FBx_CMD7	A7	A7
FBx_CMD8	A2	A2
FBx_CMD9	A0	A0
FBx_CMD10	A4	A4
FBx_CMD11	A1	A1
FBx_CMD12	BA0	BA0
FBx_CMD13	WE#	WE#
FBx_CMD14	A15	A15
FBx_CMD15	CAS#	CAS#
FBx_CMD16		CS0#_H
FBx_CMD17		
FBx_CMD18		ODT_H
FBx_CMD19		CKE_H
FBx_CMD20	A13	A13
FBx_CMD21	A8	A8
FBx_CMD22	A6	A6
FBx_CMD23	A11	A11
FBx_CMD24	A5	A5
FBx_CMD25	A3	A3
FBx_CMD26	BA2	BA2
FBx_CMD27	BA1	BA1
FBx_CMD28	A12	A12
FBx_CMD29	A10	A10
FBx_CMD30	RAS#	RAS#

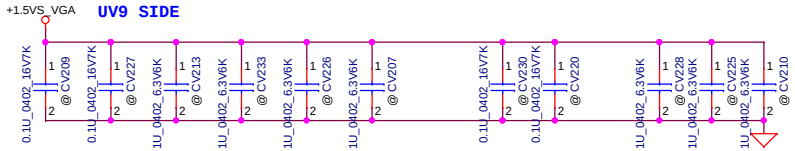

Security Classification	Compal Secret Data		
Issued Date	2012/12/26	Deciphered Date	2012/07/11

THIS SHEET OF ENGINEERING DRAWING IS THE PROPRIETARY PROPERTY OF COMPAL ELECTRONICS, INC. AND CONTAINS CONFIDENTIAL AND TRADE SECRET INFORMATION. THIS SHEET MAY NOT BE TRANSFERED FROM THE CUSTODY OF THE COMPETENT DIVISION OF R&D DEPARTMENT EXCEPT AS AUTHORIZED BY COMPAL ELECTRONICS, INC. NEITHER THIS SHEET NOR THE INFORMATION IT CONTAINS MAY BE USED BY OR DISCLOSED TO ANY THIRD PARTY WITHOUT PRIOR WRITTEN CONSENT OF COMPAL ELECTRONICS, INC.

Compal Electronics, Inc.

Title: **N13X-VRAM C Upper**

Size: Custom | Document Number: **LA-9603P** | Rev: 1.0

Date: Wednesday, January 09, 2013 | Sheet 31 of 62

WWW.AliSaler.Com

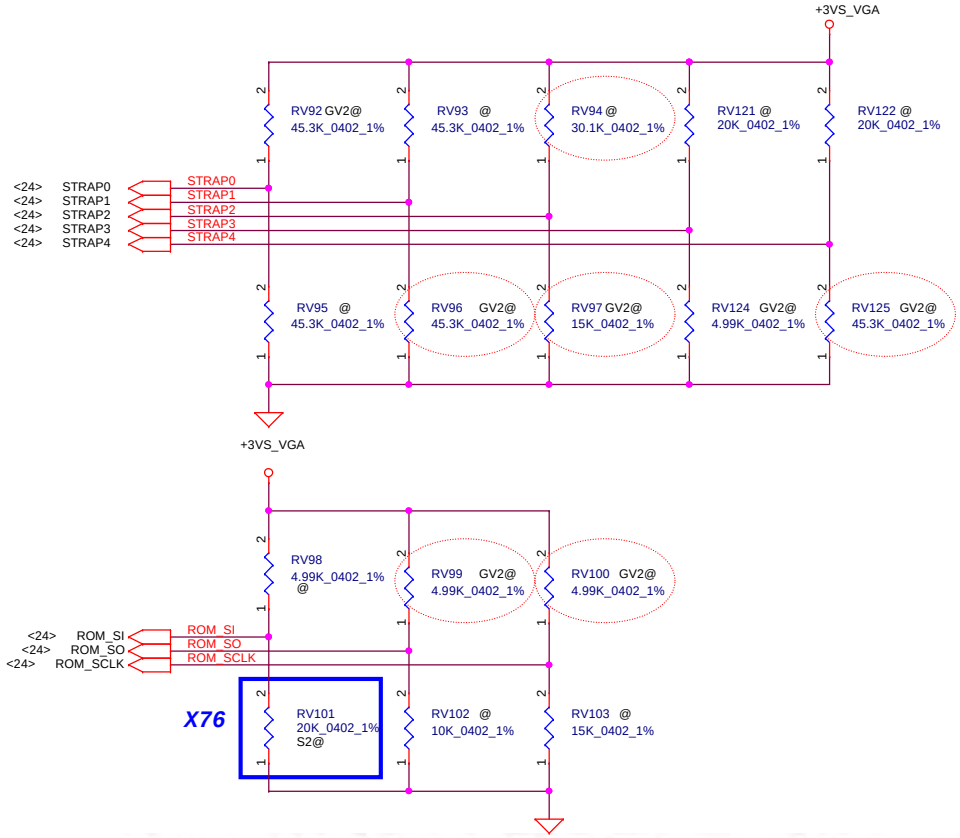

Physical Strapping pin	Power Rail	Logical Strapping Bit3	Logical Strapping Bit2	Logical Strapping Bit1	Logical Strapping Bit0
ROM_SCLK	+3VS_VGA	PCI_DEVID[4]	SUB_VENDOR	SLOT_CLK_CFG/PCI_DEVID[5]	PEX_PLL_EN_TERM
ROM_SI	+3VS_VGA	RAM_CFG[3]	RAM_CFG[2]	RAM_CFG[1]	RAM_CFG[0]
ROM_SO	+3VS_VGA	FB[1]	FB[0]	SMB_ALT_ADDR	VGA_DEVICE
STRAP0	+3VS_VGA	USER[3]	USER[2]	USER[1]	USER[0]
STRAP1	+3VS_VGA	3GIO_PAD_CFG_ADR[3]	3GIO_PAD_CFG_ADR[2]	3GIO_PAD_CFG_ADR[1]	3GIO_PAD_CFG_ADR[0]
STRAP2	+3VS_VGA	PCI_DEVID[3]	PCI_DEVID[2]	PCI_DEVID[1]	PCI_DEVID[0]
STRAP3	+3VS_VGA	SOR3_EXPOSED	SOR2_EXPOSED	SOR1_EXPOSED	SOR0_EXPOSED
STRAP4	+3VS_VGA	RESERVED	PCIE_SPEED_ CHANGE_GEN3	PCIE_MAX_SPEED	DP_PLL_VDD33V

Resistor Values	Pull-up to +3VS_VGA	Pull-down to Gnd
5K	1000	0000
10K	1001	0001
15K	1010	0010
20K	1011	0011
25K	1100	0100
30K	1101	0101
35K	1110	0110
45K	1111	0111

Vendor	VRAM Sturcture
Samsung 2G	S2@
Micron 2G	M2@
Samsung 1G	S1@
Micron 1G	M1@

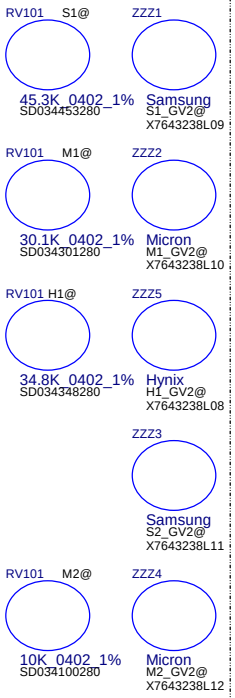

SUB_VENDOR	
0	No VBIOS ROM
1	BIOS ROM is present (Default)

3GIO_PADCFG	
3GIO_PADCFG[3:0]	
0110	Notebook Default

FB_0_BAR_SIZE	
0	Reserved
1	Reserved
2	256MB (Default)
3	Reserved

SLOT_CLK_CFG	
0	GPU and MCH don't share a common reference clock
1	GPU and MCH share a common reference clock (Default)

SMBUS_ALT_ADDR	
0	0x9E (Default)
1	0x9C (Multi-GPU usage)

USER Straps	
User[3:0]	
1000-1100	Customer defined

PEX_PLL_EN_TERM	
0	Disable (Default)
1	Enable

XCLK_417	
0	277MHz (Default)
1	Reserved

PCIE_MAX_SPEED	
0	Limit to PCIE Gen1
1	PCIE Gen 2/3 Capable

VGA_DEVICE	
0	3D Device (Class Code 302h)
1	VGA Device (Default)

Table 3. N14M-GS/LP and N14P-GV2 DDR3 Recommended Memories 128Mx16 Configuration

Configuration	Vendor	Strap	FBVDD/ FBVDDQ	Manufacturer Part Number	Max Speed CK (MHz)	Memory Date Code Minimum	Status
128Mx16 DDR3	Samsung	0x7	1.5 V/ 1.5 V	K4W2G1646E-BC1A	1000	1204	Production Candidate
				K4W2G1646E-BC11	900	1204	Production Candidate
	Micron	0x5	1.5 V/ 1.5 V	MT41J128M16JT-093G:K	1000	1234	Production Candidate
				MT41J128M16JT-107G:K	900	1150	Production Candidate
	Hynix	0x6	1.5V/ 1.5V	H5TQ2G63DFR-N0C	1000	N/A	Production Candidate
				H5TQ2G63DFR-11C	900	N/A	Production Candidate
256Mx16 DDR3	Samsung	0x3	1.5 V/ 1.5 V	K4W4G1646B-HC11	900	N/A	Production Candidate
	Micron	0x1	1.5 V/ 1.5 V	MT41K256M16HA-107G:E	900	N/A	Production Candidate

Security Classification	Compal Secret Data		
Issued Date	2012/12/26	Deciphered Date	2012/07/11

THIS SHEET OF ENGINEERING DRAWING IS THE PROPRIETARY PROPERTY OF COMPAL ELECTRONICS, INC. AND CONTAINS CONFIDENTIAL AND TRADE SECRET INFORMATION. THIS SHEET MAY NOT BE TRANSFERED FROM THE CUSTODY OF THE COMPETENT DIVISION OF R&D DEPARTMENT EXCEPT AS AUTHORIZED BY COMPAL ELECTRONICS, INC. NEITHER THIS SHEET NOR THE INFORMATION IT CONTAINS MAY BE USED BY OR DISCLOSED TO ANY THIRD PARTY WITHOUT PRIOR WRITTEN CONSENT OF COMPAL ELECTRONICS, INC.

Compal Electronics, Inc.

Title: N13X_MISC

Size: Custom | Document Number: LA-9603P | Rev: 1.0

Date: Wednesday, January 09, 2013 | Sheet 32 of 62

WWW.AliSaler.Com

LCD POWER CIRCUIT

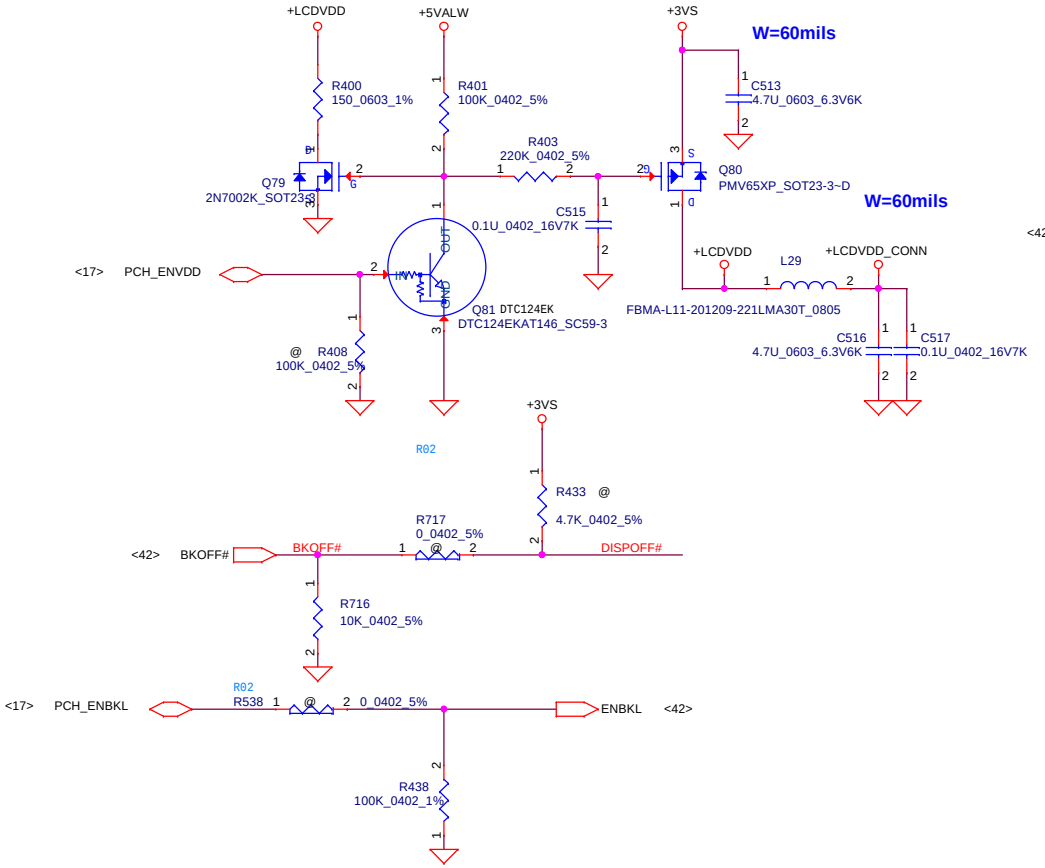

CMOS Camera

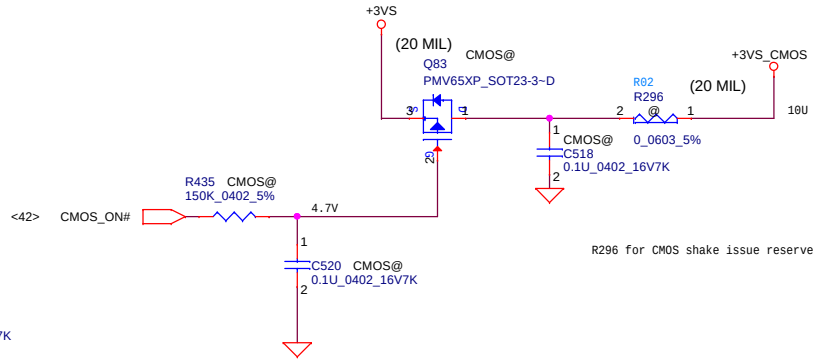

VGA LCD/PANEL BD. Conn.

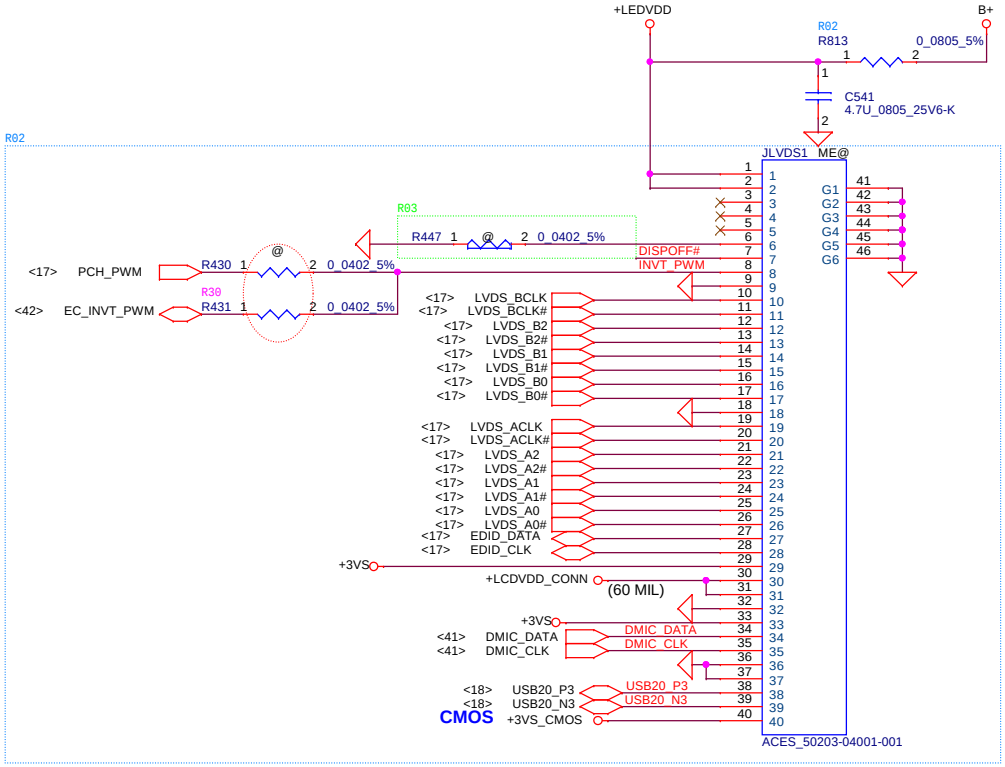

Security Classification	Compal Secret Data		
Issued Date	2012/12/26	Deciphered Date	2012/07/11

THIS SHEET OF ENGINEERING DRAWING IS THE PROPRIETARY PROPERTY OF COMPAL ELECTRONICS, INC. AND CONTAINS CONFIDENTIAL AND TRADE SECRET INFORMATION. THIS SHEET MAY NOT BE TRANSFERED FROM THE CUSTODY OF THE COMPETENT DIVISION OF R&D DEPARTMENT EXCEPT AS AUTHORIZED BY COMPAL ELECTRONICS, INC. NEITHER THIS SHEET NOR THE INFORMATION IT CONTAINS MAY BE USED BY OR DISCLOSED TO ANY THIRD PARTY WITHOUT PRIOR WRITTEN CONSENT OF COMPAL ELECTRONICS, INC.

Compal Electronics, Inc.

Title: **LVDS/CAMERA**

Size	Document Number	Rev
Custom	LA-9603P	1.0

Date: Wednesday, January 09, 2013 | Sheet 33 of 62

WWW.AliSaler.Com

CRT Connector

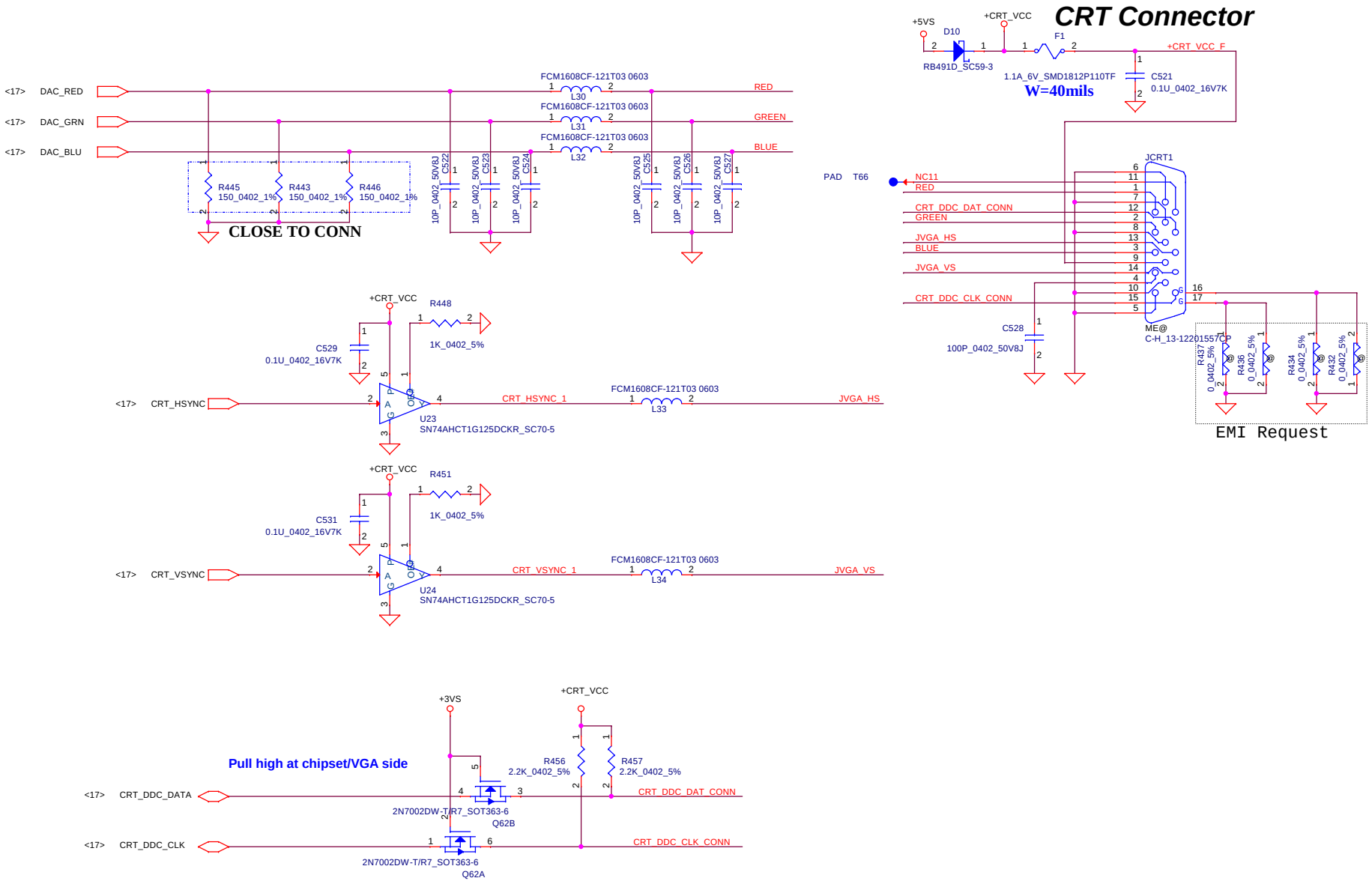

Security Classification	Compal Secret Data		
Issued Date	2012/12/26	Deciphered Date	2012/07/11

THIS SHEET OF ENGINEERING DRAWING IS THE PROPRIETARY PROPERTY OF COMPAL ELECTRONICS, INC. AND CONTAINS CONFIDENTIAL AND TRADE SECRET INFORMATION. THIS SHEET MAY NOT BE TRANSFERED FROM THE CUSTODY OF THE COMPETENT DIVISION OF R&D DEPARTMENT EXCEPT AS AUTHORIZED BY COMPAL ELECTRONICS, INC. NEITHER THIS SHEET NOR THE INFORMATION IT CONTAINS MAY BE USED BY OR DISCLOSED TO ANY THIRD PARTY WITHOUT PRIOR WRITTEN CONSENT OF COMPAL ELECTRONICS, INC.

Compal Electronics, Inc.

Title: **CRT Connector**

Size: Custom | Document Number: **LA-9603P** | Rev: 1.0

Date: Wednesday, January 09, 2013 | Sheet 34 of 62

WWW.AliSaler.Com

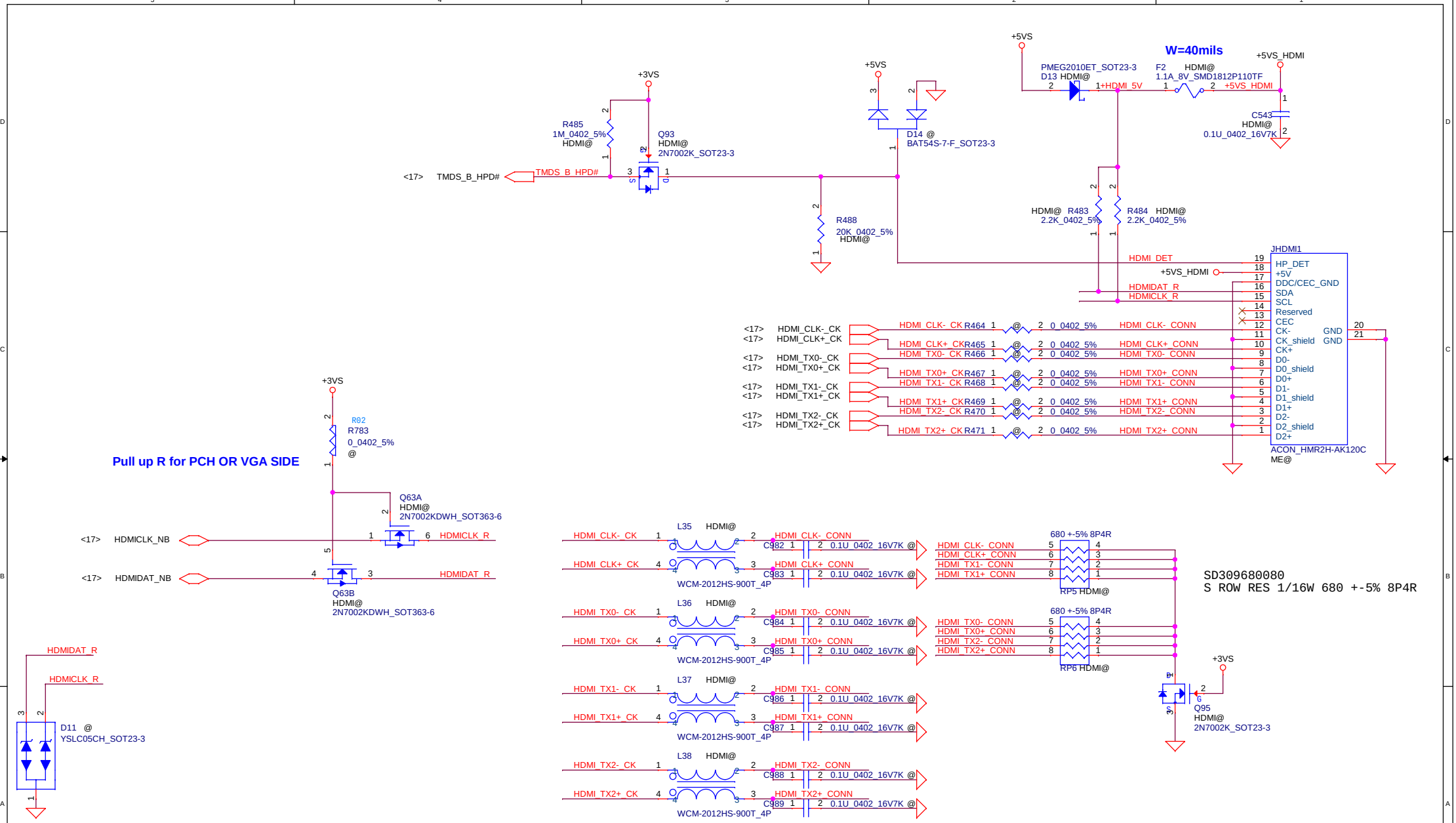

Security Classification	Compal Secret Data		
Issued Date	2012/12/26	Deciphered Date	2012/07/11

THIS SHEET OF ENGINEERING DRAWING IS THE PROPRIETARY PROPERTY OF COMPAL ELECTRONICS, INC. AND CONTAINS CONFIDENTIAL AND TRADE SECRET INFORMATION. THIS SHEET MAY NOT BE TRANSFERED FROM THE CUSTODY OF THE COMPETENT DIVISION OF R&D DEPARTMENT EXCEPT AS AUTHORIZED BY COMPAL ELECTRONICS, INC. NEITHER THIS SHEET NOR THE INFORMATION IT CONTAINS MAY BE USED BY OR DISCLOSED TO ANY THIRD PARTY WITHOUT PRIOR WRITTEN CONSENT OF COMPAL ELECTRONICS, INC.

Compal Electronics,Ltd.

Title: **HDMI CONN**

Size: B | Document Number: **LA-9603P** | Rev: 1.0

Date: Wednesday, January 09, 2013 | Sheet 35 of 62

WWW.AliSaler.Com

Mini-Express Card for WLAN/WiMAX(Half)

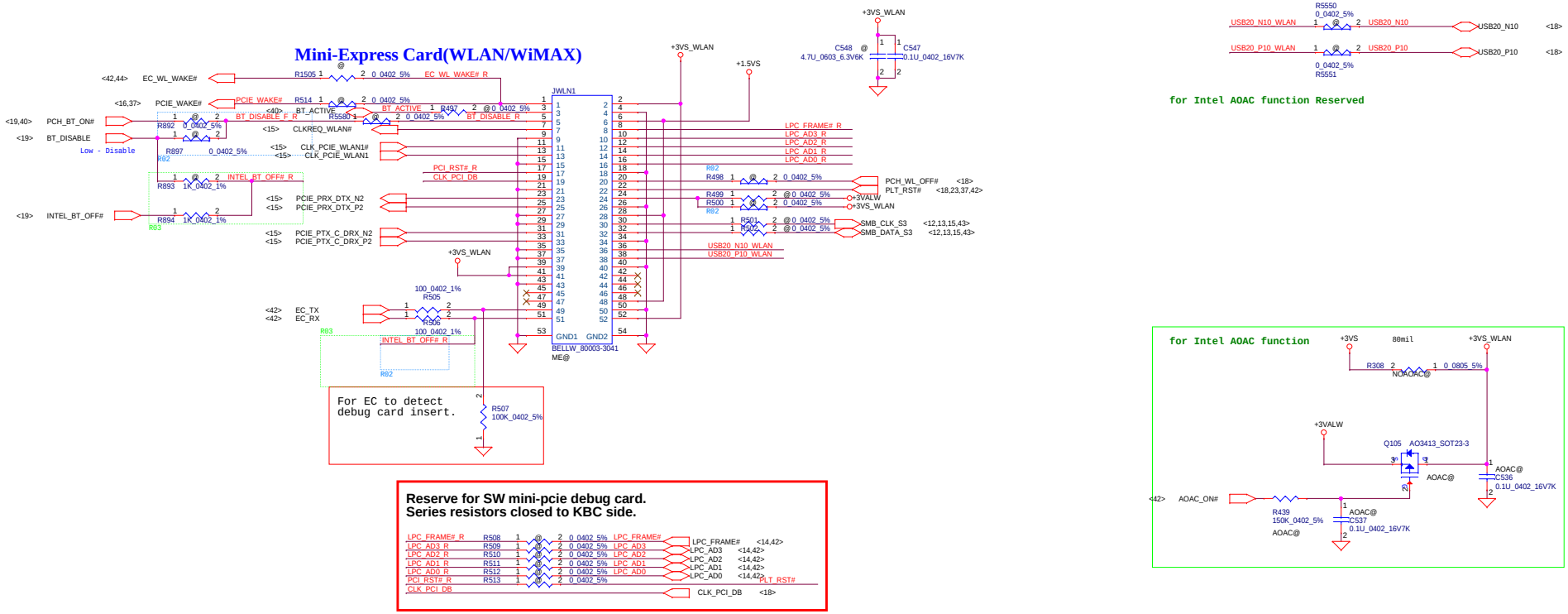

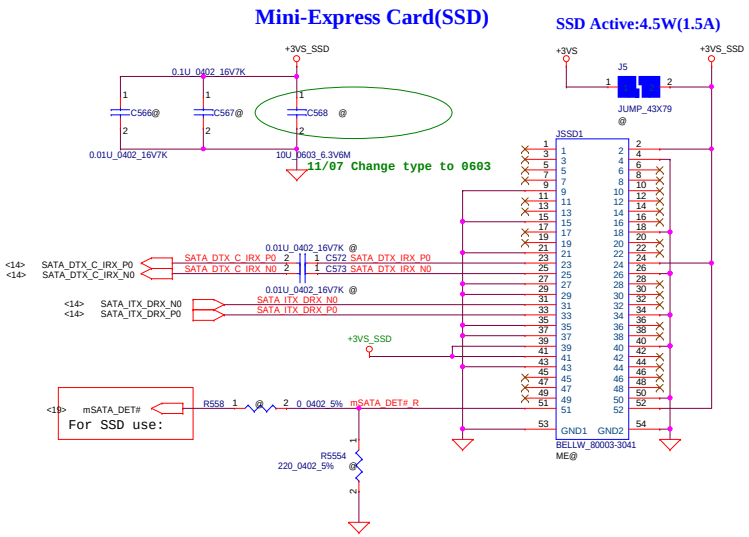

Security Classification	Compal Secret Data		
Issued Date	2012/12/26	Deciphered Date	2012/07/11

THIS SHEET OF ENGINEERING DRAWING IS THE PROPRIETARY PROPERTY OF COMPAL ELECTRONICS, INC. AND CONTAINS CONFIDENTIAL AND TRADE SECRET INFORMATION. THIS SHEET MAY NOT BE TRANSFERED FROM THE CUSTODY OF THE COMPETENT DIVISION OF R&D DEPARTMENT EXCEPT AS AUTHORIZED BY COMPAL ELECTRONICS, INC. NEITHER THIS SHEET NOR THE INFORMATION IT CONTAINS MAY BE USED BY OR DISCLOSED TO ANY THIRD PARTY WITHOUT PRIOR WRITTEN CONSENT OF COMPAL ELECTRONICS, INC.

Compal Electronics, Inc.

Title: Mini-Card/NEW Card/SIM

Size	Document Number	Rev
	LA-9603P	1.0

Date: Wednesday, January 09, 2013 | Sheet 36 of 62

WWW.AliSaler.Com

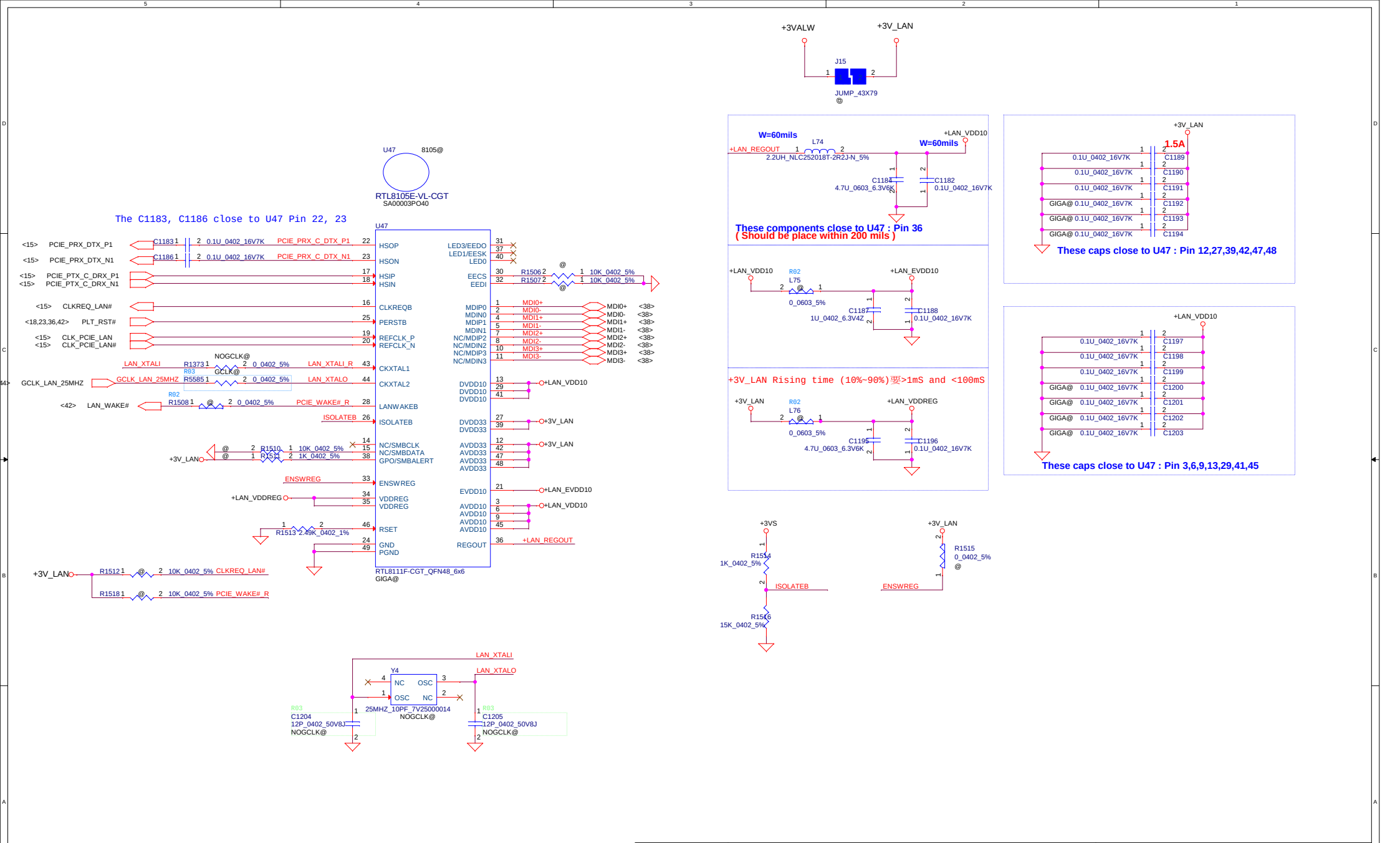

Security Classification	Compal Secret Data		
Issued Date	2012/12/26	Deciphered Date	2012/07/11

THIS SHEET OF ENGINEERING DRAWING IS THE PROPRIETARY PROPERTY OF COMPAL ELECTRONICS, INC. AND CONTAINS CONFIDENTIAL AND TRADE SECRET INFORMATION. THIS SHEET MAY NOT BE TRANSFERED FROM THE CUSTODY OF THE COMPETENT DIVISION OF R&D DEPARTMENT EXCEPT AS AUTHORIZED BY COMPAL ELECTRONICS, INC. NEITHER THIS SHEET NOR THE INFORMATION IT CONTAINS MAY BE USED BY OR DISCLOSED TO ANY THIRD PARTY WITHOUT PRIOR WRITTEN CONSENT OF COMPAL ELECTRONICS, INC.

Compal Electronics, Inc.

Title: LAN-RTL8111F/8105E

Size: Custom | Document Number: LA-9603P | Rev: 1.0

Date: Wednesday, January 09, 2013 | Sheet 37 of 62

WWW.AliSaler.Com

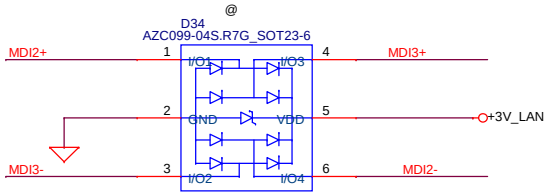

Place Close to T71

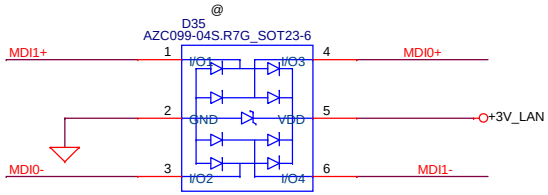

Place Close to T72

D34/D35
1'S PN:SC300001G00
2'S PN:SC300002E00

Reserve gas tube for EMI go rural solution

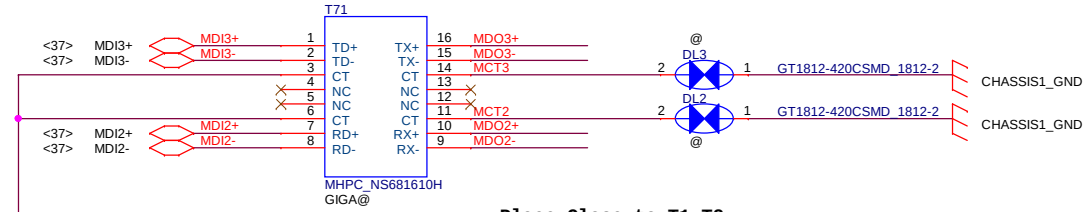

Place Close to T1,T2

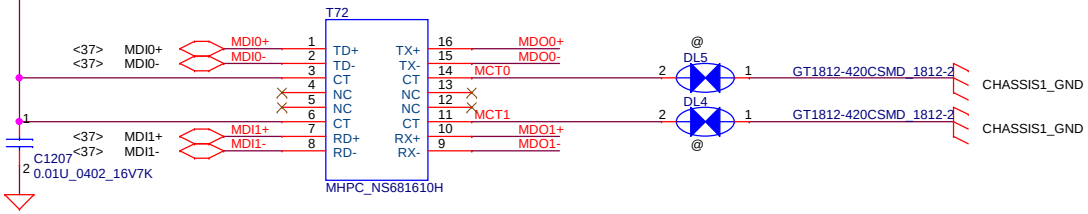

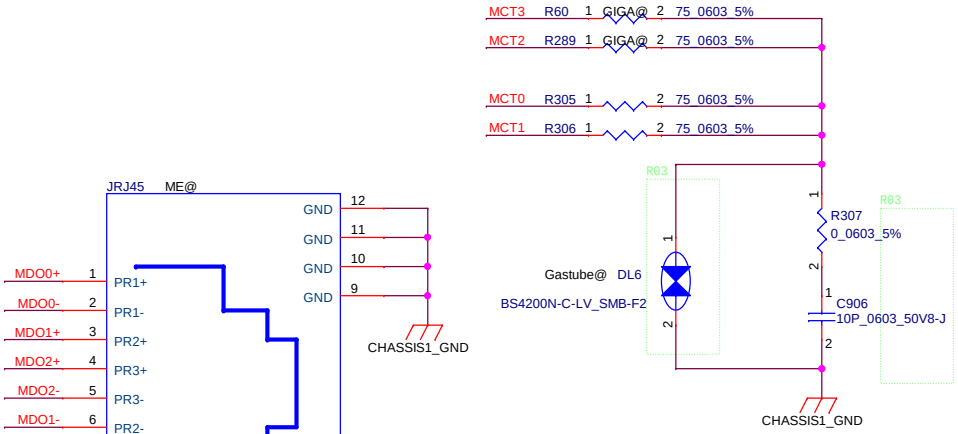

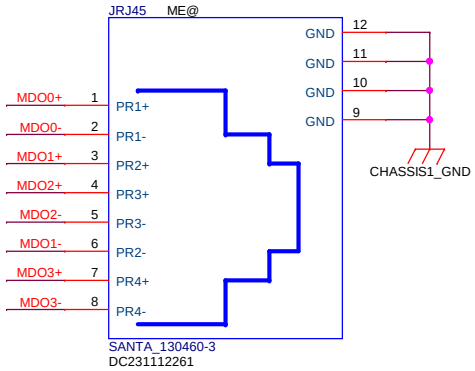

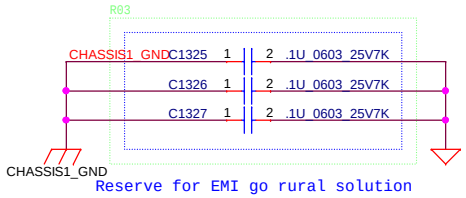

Reserve for EMI go rural solution

Security Classification	Compal Secret Data			Compal Electronics, Inc.
Issued Date	2012/12/26	Deciphered Date	2012/07/11	Title: LAN_Transformer
THIS SHEET OF ENGINEERING DRAWING IS THE PROPRIETARY PROPERTY OF COMPAL ELECTRONICS, INC. AND CONTAINS CONFIDENTIAL AND TRADE SECRET INFORMATION. THIS SHEET MAY NOT BE TRANSFERED FROM THE CUSTODY OF THE COMPETENT DIVISION OF R&D DEPARTMENT EXCEPT AS AUTHORIZED BY COMPAL ELECTRONICS, INC. NEITHER THIS SHEET NOR THE INFORMATION IT CONTAINS MAY BE USED BY OR DISCLOSED TO ANY THIRD PARTY WITHOUT PRIOR WRITTEN CONSENT OF COMPAL ELECTRONICS, INC.				Size: B; Document Number: LA-9603P; Rev: 1.0
				Date: Wednesday, January 09, 2013; Sheet 38 of 62

WWW.AliSaler.Com

SMSC thermal sensor placed near by VRAM

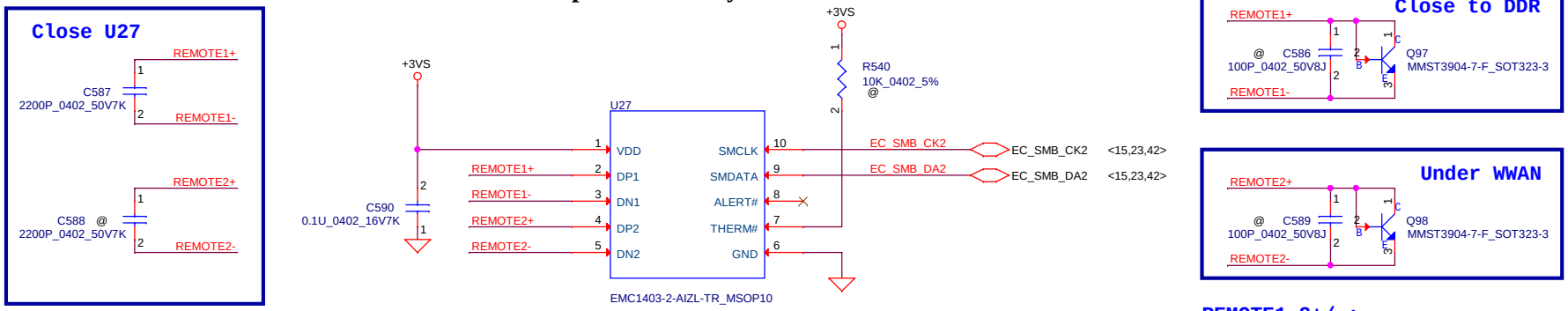

Address 1001_101xb

REMOTE1,2+/-:
Trace width/space:10/10 mil
Trace length:<8"

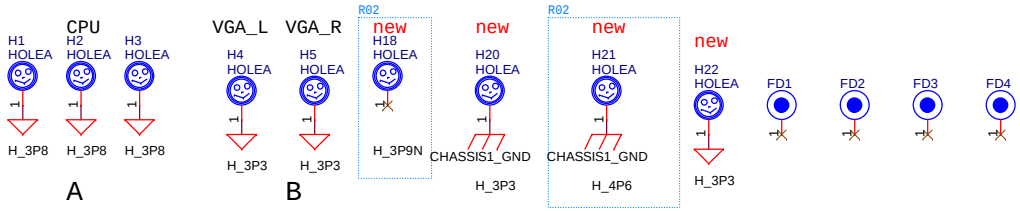

FAN1 Conn

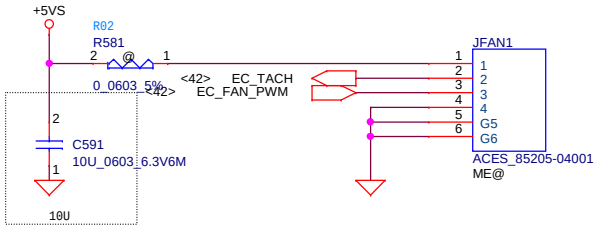

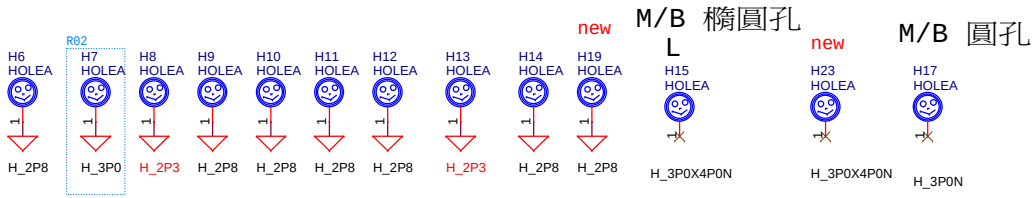

2P8 * 7 pcd

Security Classification	Compal Secret Data		
Issued Date	2012/12/26	Deciphered Date	2012/07/11

THIS SHEET OF ENGINEERING DRAWING IS THE PROPRIETARY PROPERTY OF COMPAL ELECTRONICS, INC. AND CONTAINS CONFIDENTIAL AND TRADE SECRET INFORMATION. THIS SHEET MAY NOT BE TRANSFERED FROM THE CUSTODY OF THE COMPETENT DIVISION OF R&D DEPARTMENT EXCEPT AS AUTHORIZED BY COMPAL ELECTRONICS, INC. NEITHER THIS SHEET NOR THE INFORMATION IT CONTAINS MAY BE USED BY OR DISCLOSED TO ANY THIRD PARTY WITHOUT PRIOR WRITTEN CONSENT OF COMPAL ELECTRONICS, INC.

Compal Electronics,Ltd.

Title: **Fintek-Thermal IC/FAN/screw**

Size: B | Document Number: **LA-9603P** | Rev: 1.0

Date: Wednesday, January 09, 2013 | Sheet 39 of 62

WWW.AliSaler.Com

BT MODULE CONN

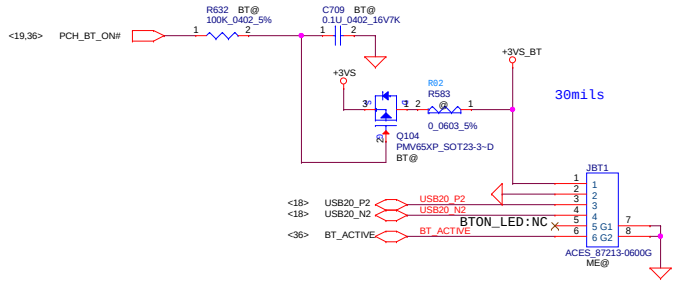

SATA HDD Conn.

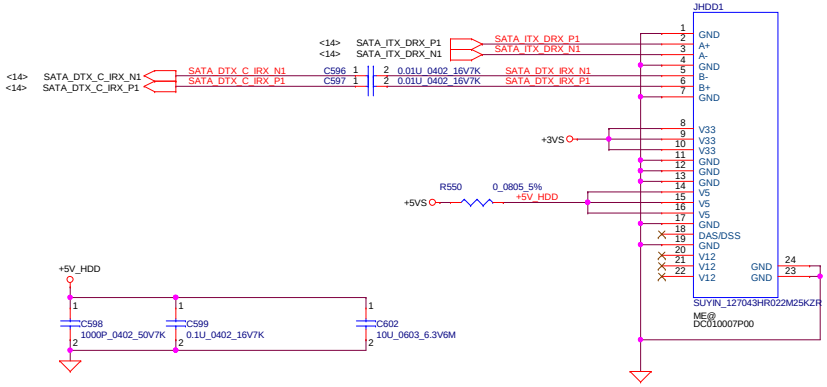

ODD Power Control

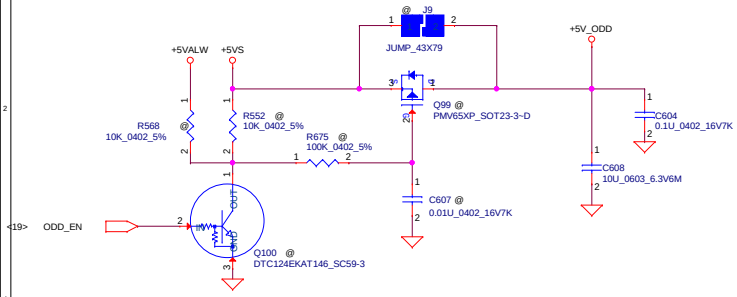

FOR 15" SATA ODD FFC Conn.

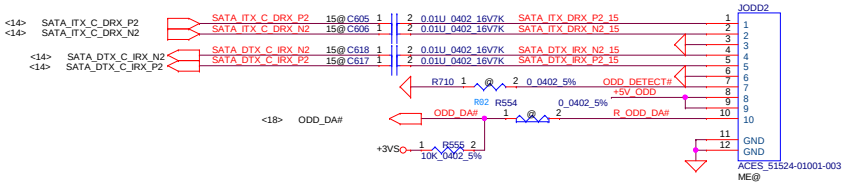

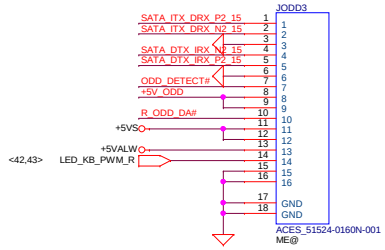

Co-lay

FOR 14" SATA ODD Conn.

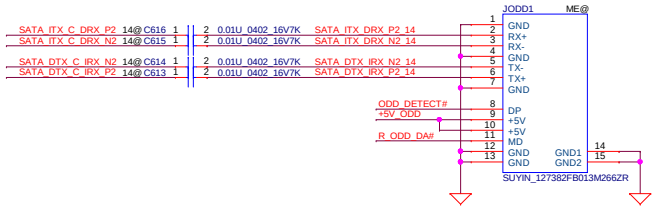

Security Classification	Compal Secret Data		
Issued Date	2012/12/26	Deciphered Date	2012/07/11

THIS SHEET OF ENGINEERING DRAWING IS THE PROPRIETARY PROPERTY OF COMPAL ELECTRONICS, INC. AND CONTAINS CONFIDENTIAL AND TRADE SECRET INFORMATION. THIS SHEET MAY NOT BE TRANSFERED FROM THE CUSTODY OF THE COMPETENT DIVISION OF R&D DEPARTMENT EXCEPT AS AUTHORIZED BY COMPAL ELECTRONICS, INC. NEITHER THIS SHEET NOR THE INFORMATION IT CONTAINS MAY BE USED BY OR DISCLOSED TO ANY THIRD PARTY WITHOUT PRIOR WRITTEN CONSENT OF COMPAL ELECTRONICS, INC.

Compal Electronics, Inc.

Title: **HDD/ODD/BT Connector**

Size: Custom | Document Number: **LA-9603P** | Rev: 1.0

Date: Wednesday, January 09, 2013 | Sheet 40 of 62

WWW.AliSaler.Com

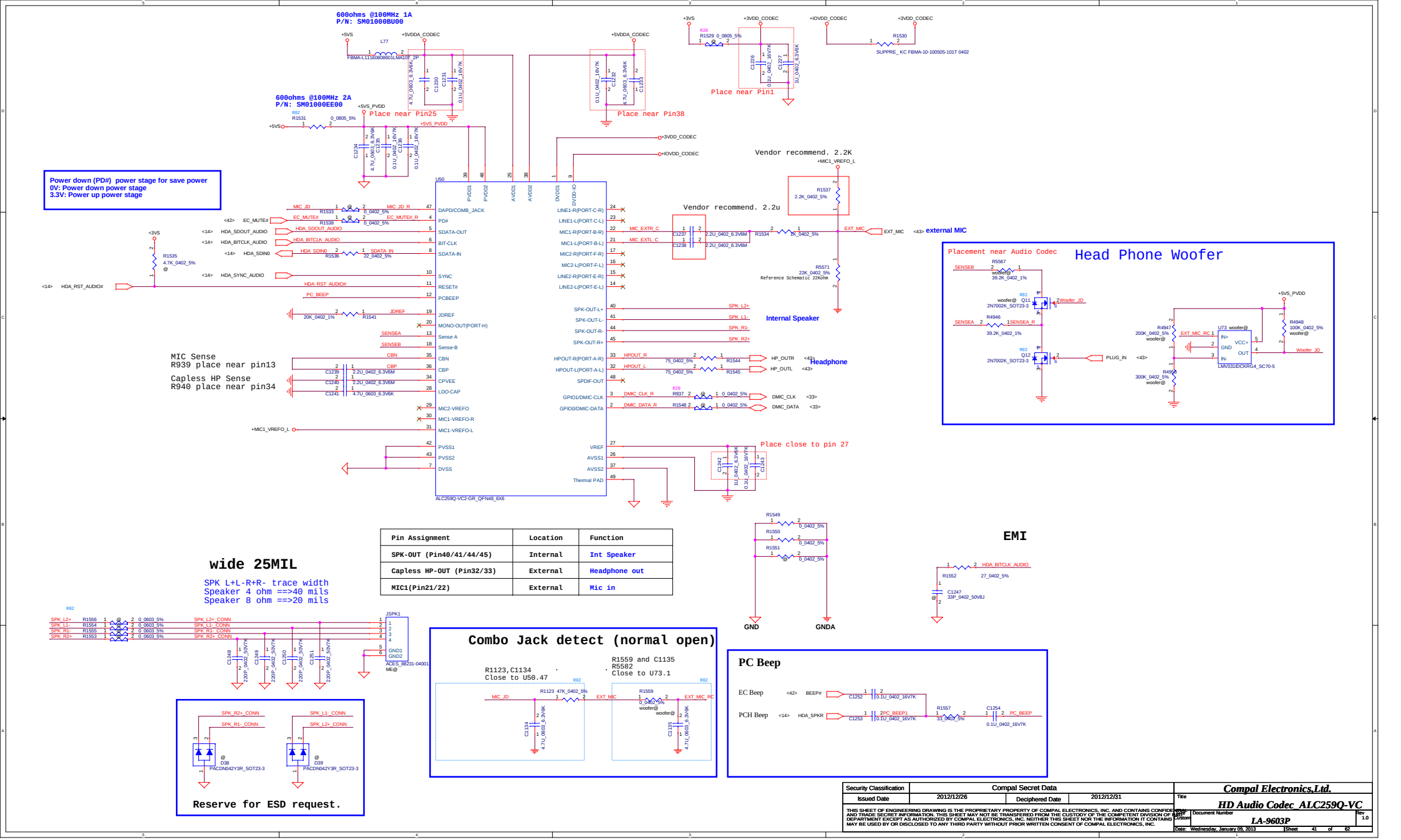

Pin Assignment	Location	Function
SPK-OUT (Pin40/41/44/45)	Internal	Int Speaker
Capless HP-OUT (Pin32/33)	External	Headphone out
MIC1(Pin21/22)	External	Mic in

wide 25MIL

SPK L+L-R+R- trace width
Speaker 4 ohm ==>40 mils
Speaker 8 ohm ==>20 mils

Reserve for ESD request.

Combo Jack detect (normal open)

PC Beep

Security Classification	Compal Secret Data		
Issued Date	2012/12/26	Deciphered Date	2012/12/31

THIS SHEET OF ENGINEERING DRAWING IS THE PROPRIETARY PROPERTY OF COMPAL ELECTRONICS, INC. AND CONTAINS CONFIDENTIAL AND TRADE SECRET INFORMATION. THIS SHEET MAY NOT BE TRANSFERED FROM THE CUSTODY OF THE COMPETENT DIVISION OF R&D DEPARTMENT EXCEPT AS AUTHORIZED BY COMPAL ELECTRONICS, INC. NEITHER THIS SHEET NOR THE INFORMATION IT CONTAINS MAY BE USED BY OR DISCLOSED TO ANY THIRD PARTY WITHOUT PRIOR WRITTEN CONSENT OF COMPAL ELECTRONICS, INC.

Compal Electronics,Ltd.

Title: HD Audio Codec_ALC259Q-VC

Size: A3 | Document Number: LA-9603P | Rev: 1.0

Date: Wednesday, January 09, 2013 | Sheet 41 of 62

WWW.AliSaler.Com

Vcc	3.3V +/- 5%					
R694	100K +/- 5%					
Board ID	R695	V_{AD_BID} min	V_{AD_BID} typ	V_{AD_BID} max		PCB
0	0	0 V	0 V	0 V	MP	LA-9061P
1	8.2K +/- 5%	0.216 V	0.250 V	0.289 V	PVT	LA-9061P
2	18K +/- 5%	0.436 V	0.503 V	0.538 V	DVT	LA-9061P
3	33K +/- 5%	0.712 V	0.819 V	0.875 V	EVT	LA-9061P
4	56K +/- 5%	1.036 V	1.185 V	1.264 V	PVT	LA-9063P
5	100K +/- 5%	1.453 V	1.650V	1.759 V	PVT	LA-9063P TS_15

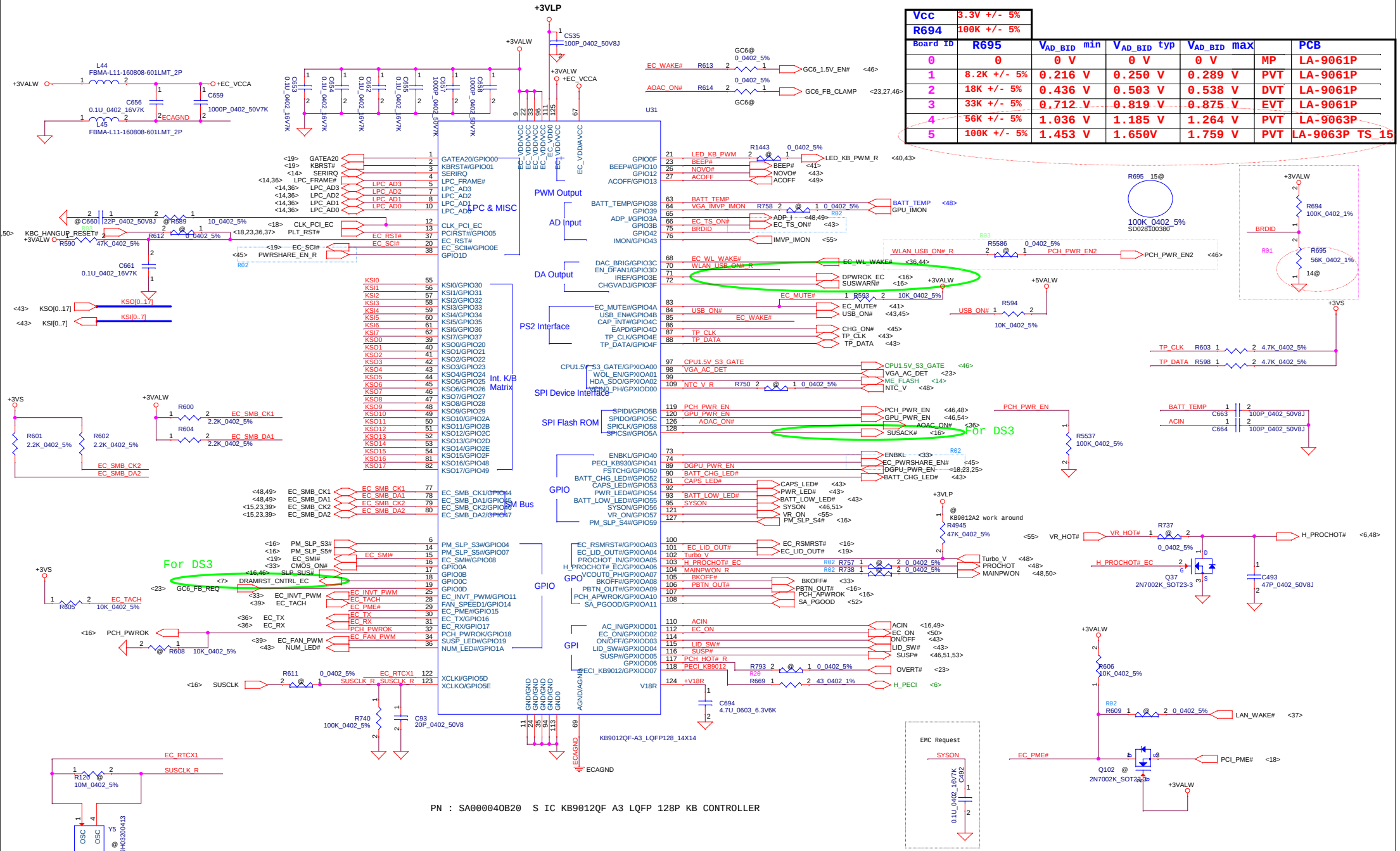

Security Classification	Compal Secret Data		
Issued Date	2012/12/26	Deciphered Date	2012/07/11

THIS SHEET OF ENGINEERING DRAWING IS THE PROPRIETARY PROPERTY OF COMPAL ELECTRONICS, INC. AND CONTAINS CONFIDENTIAL AND TRADE SECRET INFORMATION. THIS SHEET MAY NOT BE TRANSFERED FROM THE CUSTODY OF THE COMPETENT DIVISION OF R&D DEPARTMENT EXCEPT AS AUTHORIZED BY COMPAL ELECTRONICS, INC. NEITHER THIS SHEET NOR THE INFORMATION IT CONTAINS MAY BE USED BY OR DISCLOSED TO ANY THIRD PARTY WITHOUT PRIOR WRITTEN CONSENT OF COMPAL ELECTRONICS, INC.

Compal Electronics, Inc.

Title: **BIOS & EC I/O Port**

Size: Custom | Document Number: **LA-9603P** | Rev: 1.0

Date: Wednesday, January 09, 2013 | Sheet 42 of 62

WWW.AliSaler.Com

ON/OFF switch

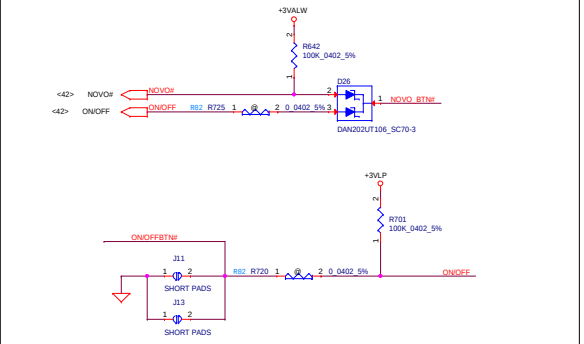

K/B Connector

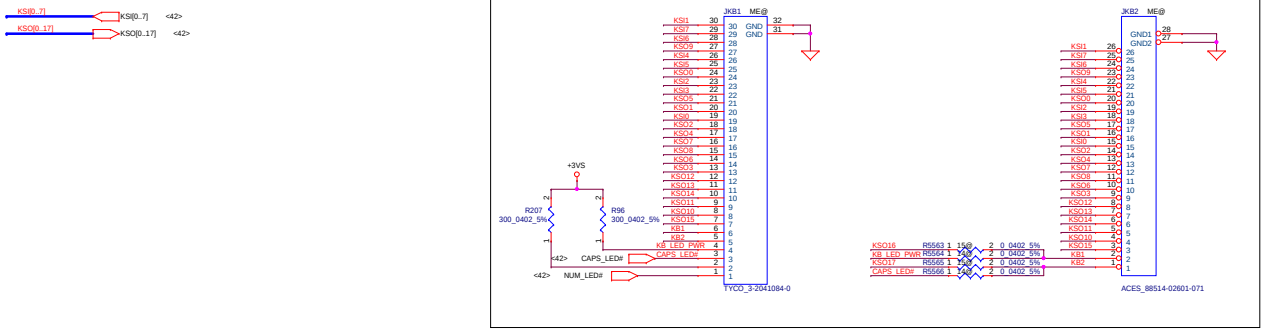

TP/B Connector

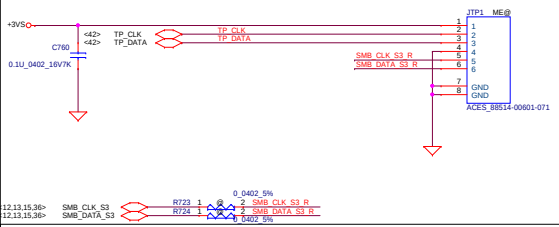

PWR/B Connector

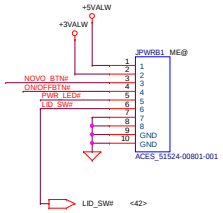

USB I/O Connector

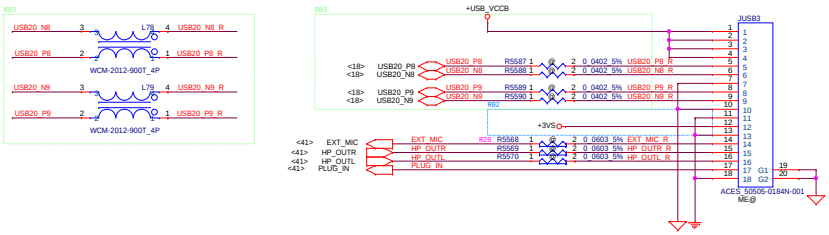

LED (For 14")

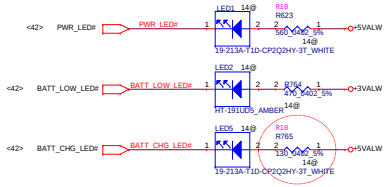

LED (For 15")

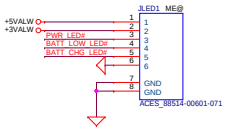

Right Side USB2.0 Port X 2 (USB/B)

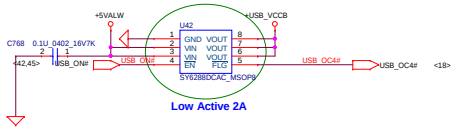

EC RESEST function

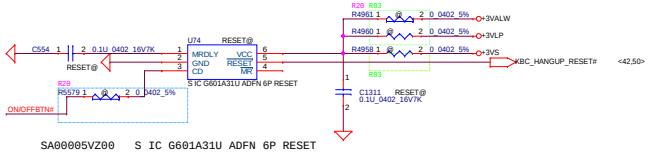

SA00005VZ00 S IC G601A31U ADFN 6P RESET

KB Lighting CONN.4pin

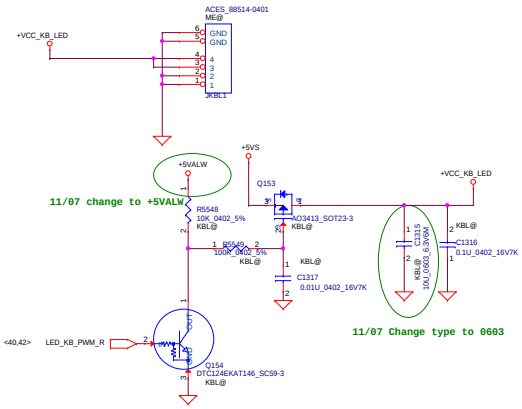

Touch Screen

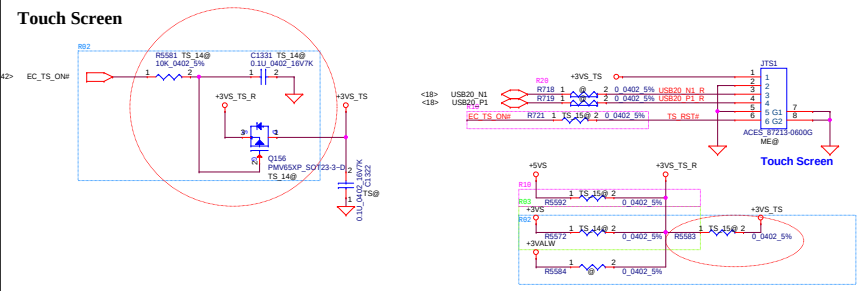

Security Classification	Compal Secret Data		
Issued Date	2012/12/26	Deciphered Date	2012/07/11

THIS SHEET OF ENGINEERING DRAWING IS THE PROPRIETARY PROPERTY OF COMPAL ELECTRONICS, INC. AND CONTAINS CONFIDENTIAL AND TRADE SECRET INFORMATION. THIS SHEET MAY NOT BE TRANSFERRED FROM THE CUSTODY OF THE COMPETENT DIVISION OF R&D DEPARTMENT EXCEPT AS AUTHORIZED BY COMPAL ELECTRONICS, INC. NEITHER THIS SHEET NOR THE INFORMATION IT CONTAINS MAY BE USED BY OR DISCLOSED TO ANY THIRD PARTY WITHOUT PRIOR WRITTEN CONSENT OF COMPAL ELECTRONICS, INC.

Compal Electronics, Inc.

Title: ROM/KBD/PWR/CR/LED/TP Conn.

Size: Custom | Document Number: LA-9603P | Rev: 1.0

Date: Wednesday, January 09, 2013 | Sheet 43 of 62

WWW.AliSaler.Com

RTS5178 CardReader

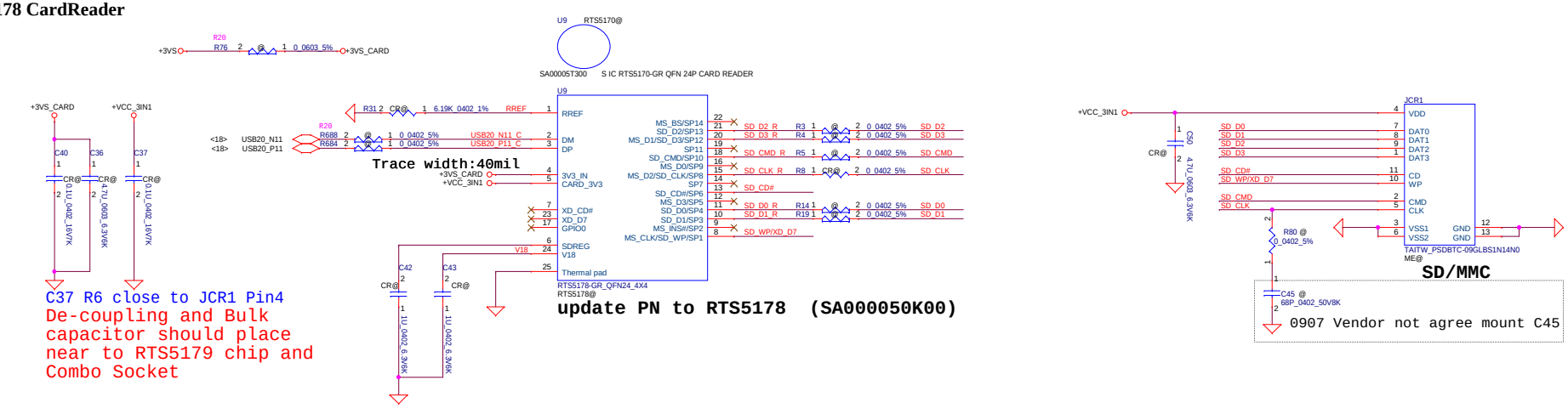

Green Clock

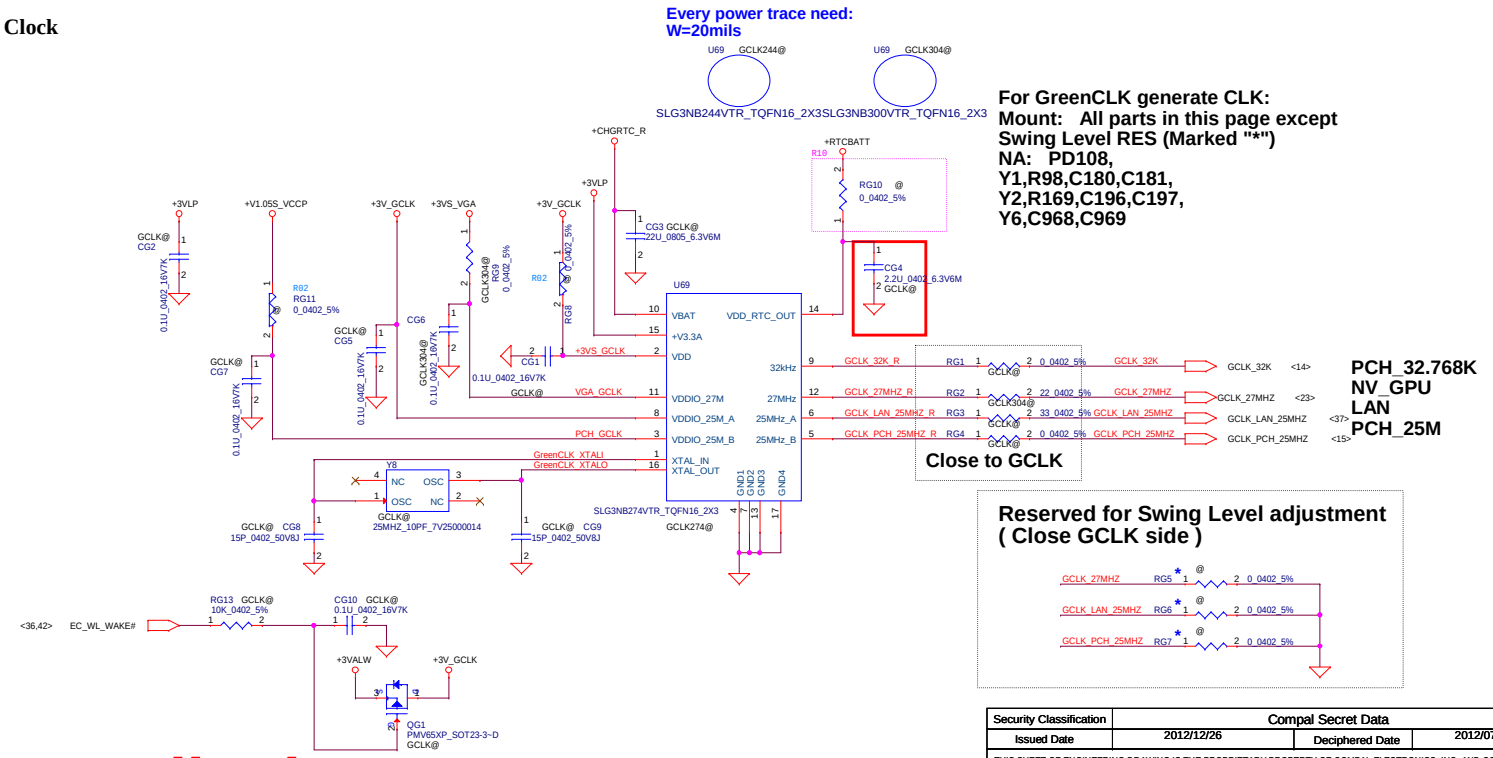

Security Classification	Compal Secret Data			Compal Electronics, Inc.
Issued Date	2012/12/26	Deciphered Date	2012/07/11	Title: RTS5178/Green Clock
				Size: C; Document Number: LA-9603P; Rev: 1.0
				Date: Wednesday, January 09, 2013; Sheet 44 of 62

THIS SHEET OF ENGINEERING DRAWING IS THE PROPRIETARY PROPERTY OF COMPAL ELECTRONICS, INC. AND CONTAINS CONFIDENTIAL AND TRADE SECRET INFORMATION. THIS SHEET MAY NOT BE TRANSFERED FROM THE CUSTODY OF THE COMPETENT DIVISION OF R&D DEPARTMENT EXCEPT AS AUTHORIZED BY COMPAL ELECTRONICS, INC. NEITHER THIS SHEET NOR THE INFORMATION IT CONTAINS MAY BE USED BY OR DISCLOSED TO ANY THIRD PARTY WITHOUT PRIOR WRITTEN CONSENT OF COMPAL ELECTRONICS, INC.

WWW.AliSaler.Com

LEFT SIDE USB3.0 PORT X1

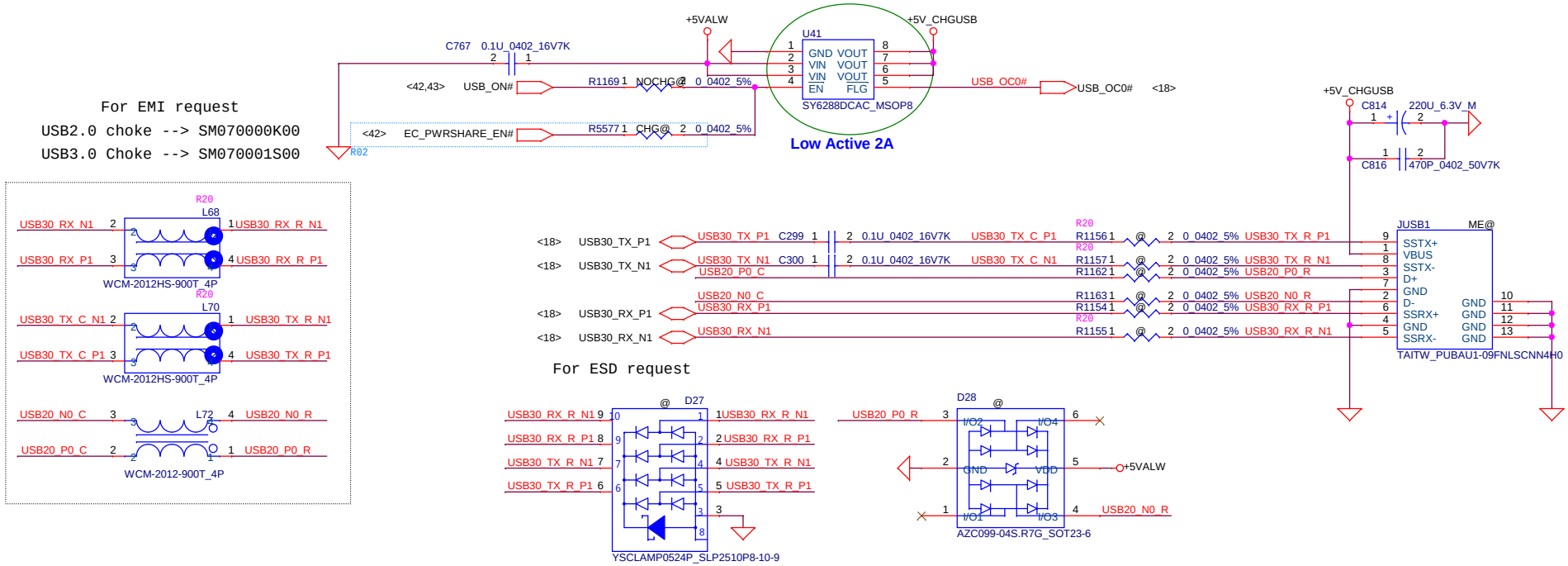

Left Side Charger USB3.0 Port

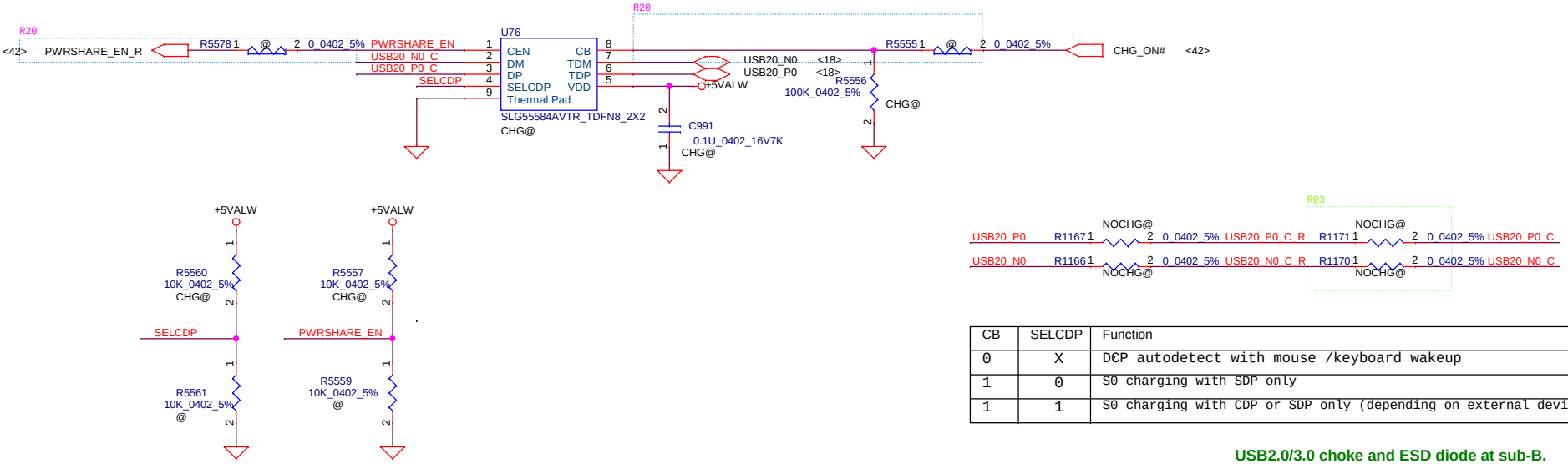

CB	SELCDP	Function
0	X	DCP autodetect with mouse /keyboard wakeup
1	0	S0 charging with SDP only
1	1	S0 charging with CDP or SDP only (depending on external device)

USB2.0/3.0 choke and ESD diode at sub-B.

Security Classification	Compal Secret Data		
Issued Date	2012/12/26	Deciphered Date	2012/07/11

THIS SHEET OF ENGINEERING DRAWING IS THE PROPRIETARY PROPERTY OF COMPAL ELECTRONICS, INC. AND CONTAINS CONFIDENTIAL AND TRADE SECRET INFORMATION. THIS SHEET MAY NOT BE TRANSFERED FROM THE CUSTODY OF THE COMPETENT DIVISION OF R&D DEPARTMENT EXCEPT AS AUTHORIZED BY COMPAL ELECTRONICS, INC. NEITHER THIS SHEET NOR THE INFORMATION IT CONTAINS MAY BE USED BY OR DISCLOSED TO ANY THIRD PARTY WITHOUT PRIOR WRITTEN CONSENT OF COMPAL ELECTRONICS, INC.

Title: ***USB3.0/Left USB Ports***

Size: Custom | Document Number | Rev 1.0

Date: Wednesday, January 09, 2013 | Sheet 45 of 62

WWW.AliSaler.Com

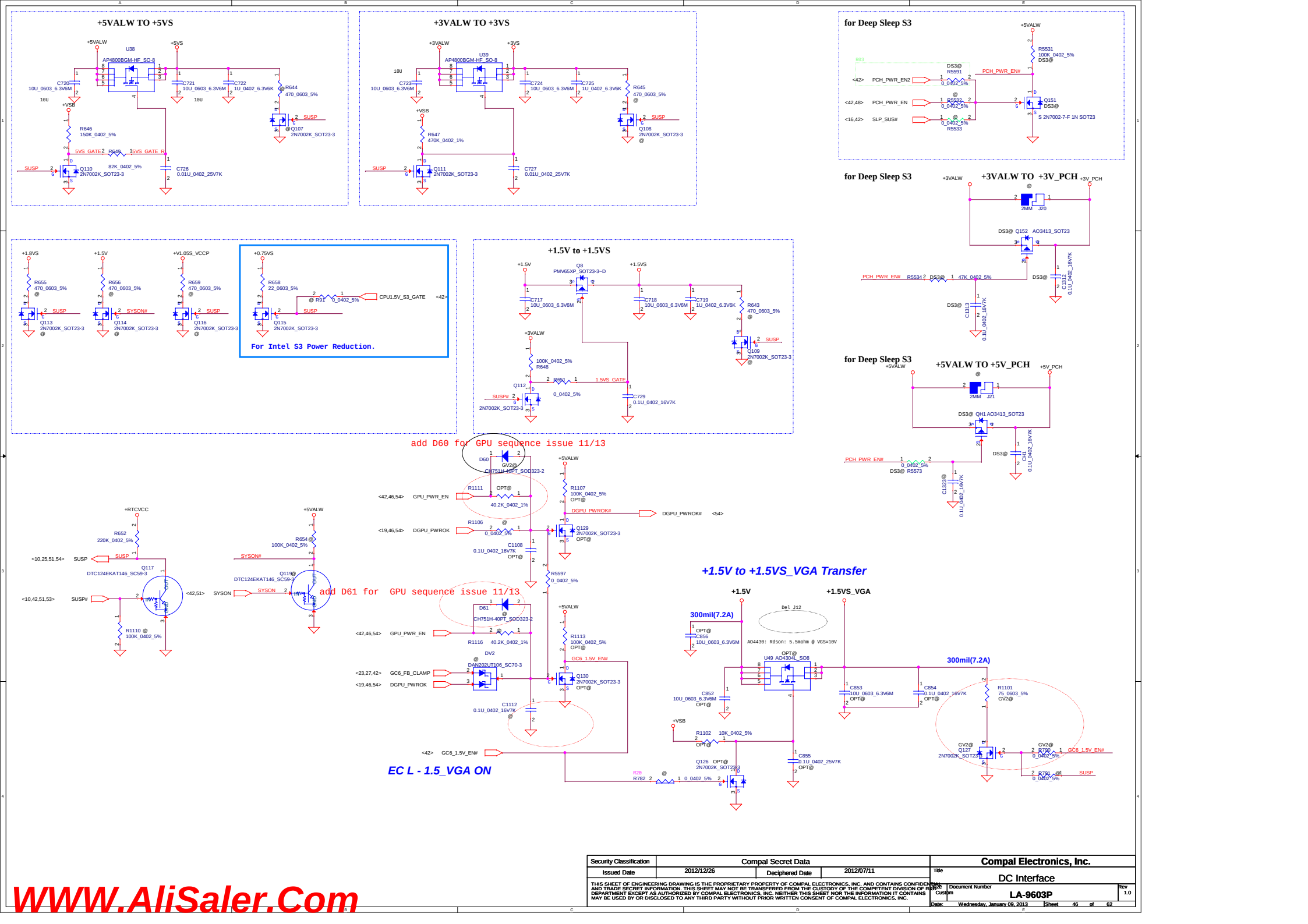

Security Classification	Compal Secret Data		
Issued Date	2012/12/26	Deciphered Date	2012/07/11

THIS SHEET OF ENGINEERING DRAWING IS THE PROPRIETARY PROPERTY OF COMPAL ELECTRONICS, INC. AND CONTAINS CONFIDENTIAL AND TRADE SECRET INFORMATION. THIS SHEET MAY NOT BE TRANSFERED FROM THE CUSTODY OF THE COMPETENT DIVISION OF R&D DEPARTMENT EXCEPT AS AUTHORIZED BY COMPAL ELECTRONICS, INC. NEITHER THIS SHEET NOR THE INFORMATION IT CONTAINS MAY BE USED BY OR DISCLOSED TO ANY THIRD PARTY WITHOUT PRIOR WRITTEN CONSENT OF COMPAL ELECTRONICS, INC.

Compal Electronics, Inc.

Title: DC Interface

Size: Custom | Document Number: LA-9603P | Rev: 1.0

Date: Wednesday, January 09, 2013 | Sheet 46 of 62

WWW.AliSaler.Com

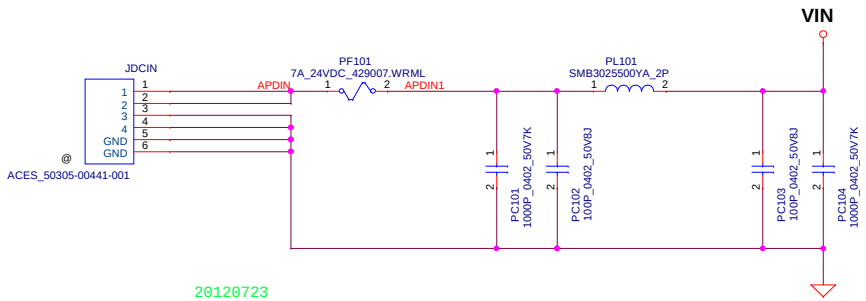

20120723
For all sku
1. Change PR108 to 150_0603_5% SD013150080 from 560_0603_5% SD013560080
   Change PR109 to 1K_0603_5% SD013100180 from 560_0603_5% SD013560080

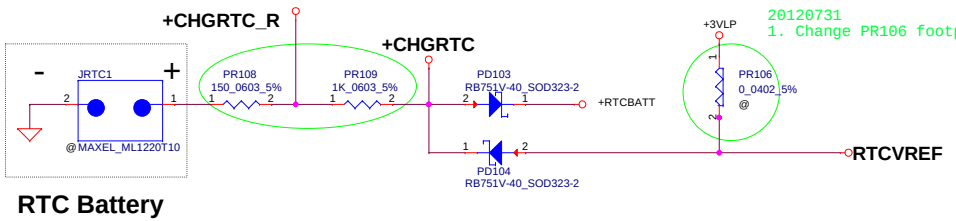

20120731
1. Change PR106 footprint to R0402_0ohm-NEW

20120731
1. Add PR110 SD013000080 0_0603_5%
   Add PR111 SD013150080 150_0603_5%

Security Classification	Compal Secret Data		
Issued Date	2010/01/25	Deciphered Date	2012/07/11

THIS SHEET OF ENGINEERING DRAWING IS THE PROPRIETARY PROPERTY OF COMPAL ELECTRONICS, INC. AND CONTAINS CONFIDENTIAL AND TRADE SECRET INFORMATION. THIS SHEET MAY NOT BE TRANSFERED FROM THE CUSTODY OF THE COMPETENT DIVISION OF R&D DEPARTMENT EXCEPT AS AUTHORIZED BY COMPAL ELECTRONICS, INC. NEITHER THIS SHEET NOR THE INFORMATION IT CONTAINS MAY BE USED BY OR DISCLOSED TO ANY THIRD PARTY WITHOUT PRIOR WRITTEN CONSENT OF COMPAL ELECTRONICS, INC.

Compal Electronics, Inc.

Title: PWR DCIN / RTC Battery

Size: Custom | Document Number: Xz90 | Rev: 0.1

Date: Wednesday, January 09, 2013 | Sheet 47 of 62

WWW.AliSaler.Com

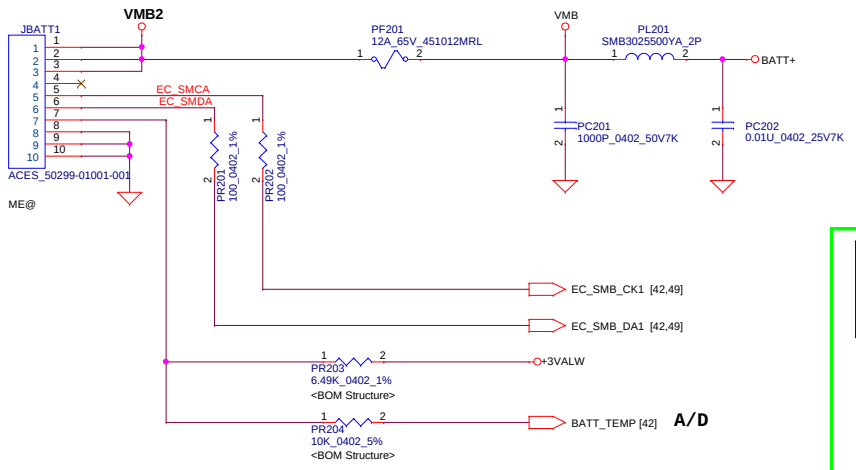

ADP_I need to write Charge Options Register (0x12H)=> bit6=1

0: IOUT is the 20x current amplifier output <default @ POR>
1: IOUT is the 40x current amplifier output

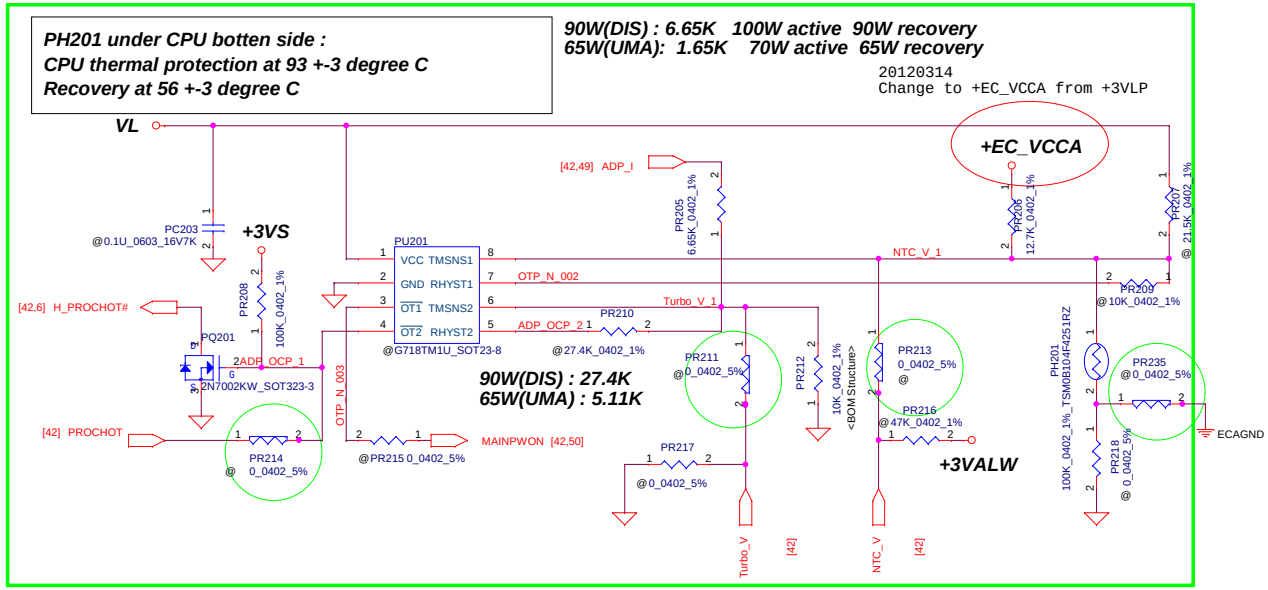

20120731
1. Change PR214,PR211,PR213 and PR235 footprint to R0402_0ohm-NEW

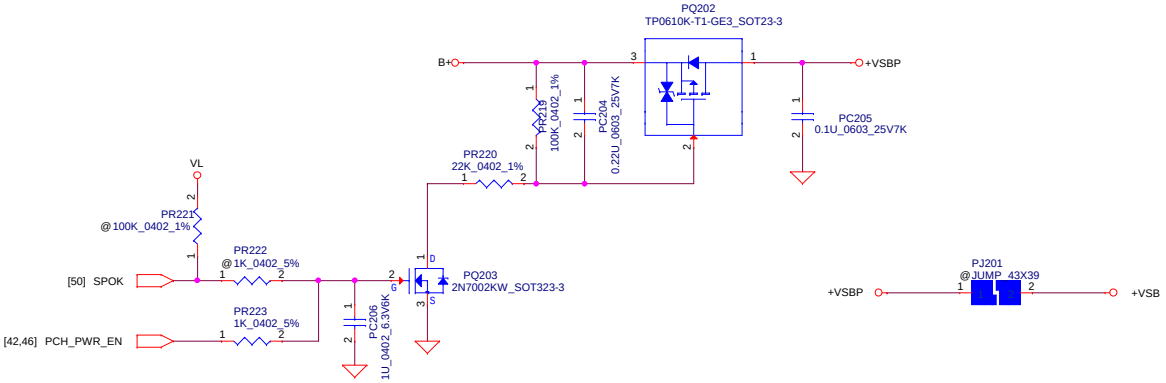

Security Classification	Compal Secret Data		
Issued Date	2010/01/25	Deciphered Date	2012/07/11

THIS SHEET OF ENGINEERING DRAWING IS THE PROPRIETARY PROPERTY OF COMPAL ELECTRONICS, INC. AND CONTAINS CONFIDENTIAL AND TRADE SECRET INFORMATION. THIS SHEET MAY NOT BE TRANSFERED FROM THE CUSTODY OF THE COMPETENT DIVISION OF R&D DEPARTMENT EXCEPT AS AUTHORIZED BY COMPAL ELECTRONICS, INC. NEITHER THIS SHEET NOR THE INFORMATION IT CONTAINS MAY BE USED BY OR DISCLOSED TO ANY THIRD PARTY WITHOUT PRIOR WRITTEN CONSENT OF COMPAL ELECTRONICS, INC.

Compal Electronics, Inc.

Title: PWR-BATTERY CONN/OTP

Size: Custom | Document Number: Zx90 | Rev: 0.1

Date: Wednesday, January 09, 2013 | Sheet 48 of 62

WWW.AliSaler.Com

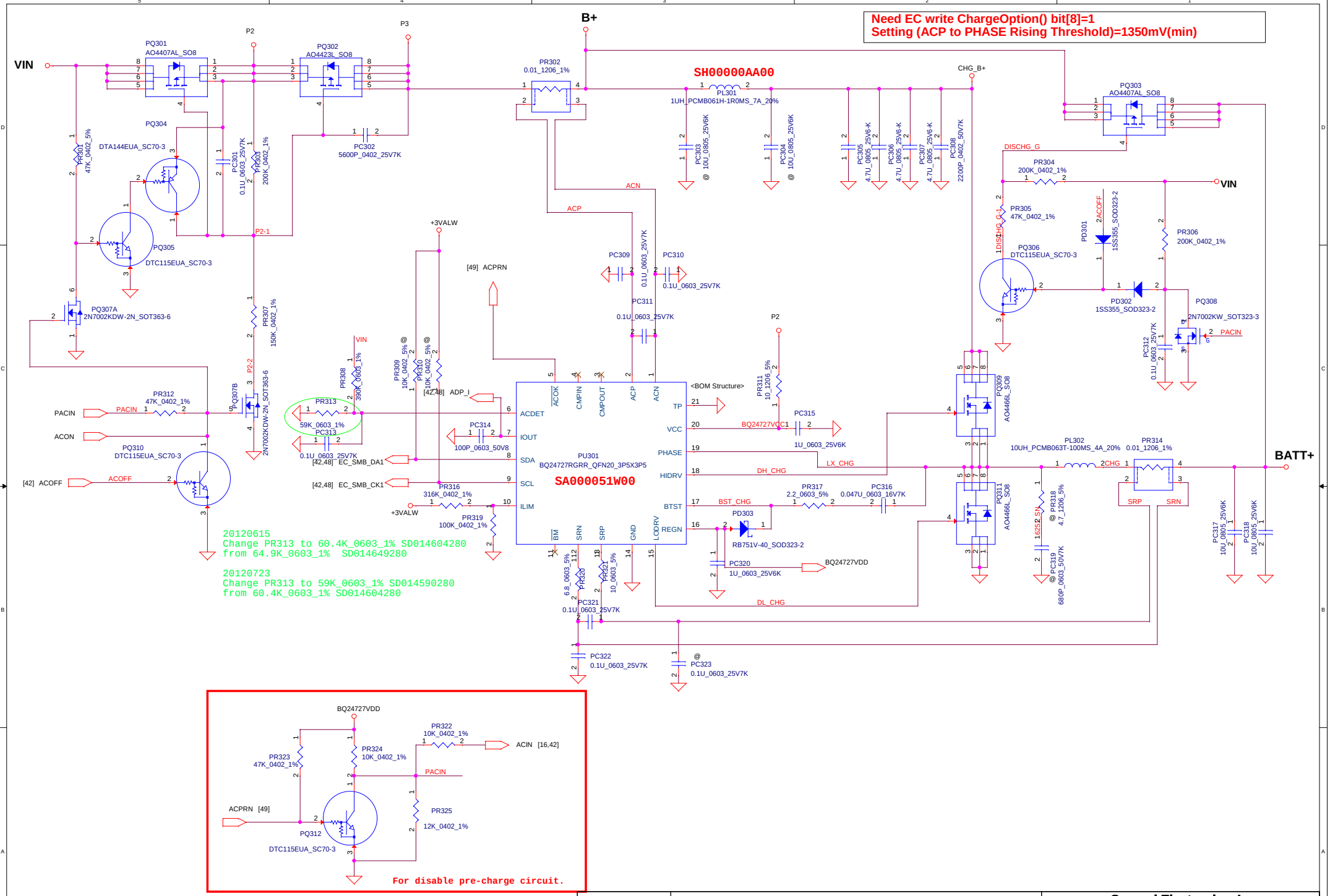

Security Classification	Compal Secret Data		
Issued Date	2010/01/13	Deciphered Date	2012/07/11

THIS SHEET OF ENGINEERING DRAWING IS THE PROPRIETARY PROPERTY OF COMPAL ELECTRONICS, INC. AND CONTAINS CONFIDENTIAL AND TRADE SECRET INFORMATION. THIS SHEET MAY NOT BE TRANSFERED FROM THE CUSTODY OF THE COMPETENT DIVISION OF R&D DEPARTMENT EXCEPT AS AUTHORIZED BY COMPAL ELECTRONICS, INC. NEITHER THIS SHEET NOR THE INFORMATION IT CONTAINS MAY BE USED BY OR DISCLOSED TO ANY THIRD PARTY WITHOUT PRIOR WRITTEN CONSENT OF COMPAL ELECTRONICS, INC.

Compal Electronics, Inc.

Title: **CHARGER**

Size: | Document Number: **Zx90** | Rev: 0.1

Date: Wednesday, January 09, 2013 | Sheet 49 of 62

WWW.AliSaler.Com

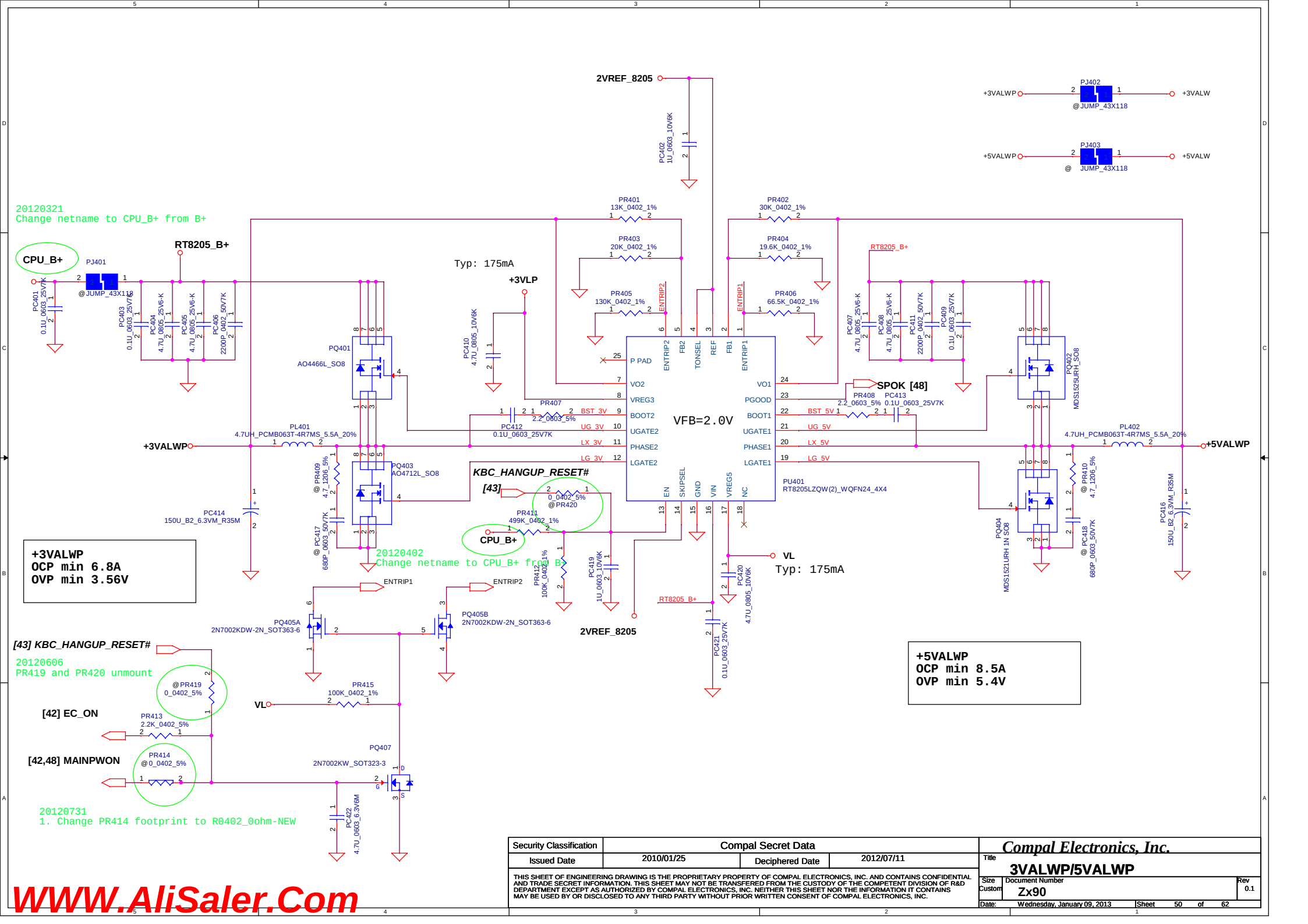

Security Classification	Compal Secret Data		
Issued Date	2010/01/25	Deciphered Date	2012/07/11

THIS SHEET OF ENGINEERING DRAWING IS THE PROPRIETARY PROPERTY OF COMPAL ELECTRONICS, INC. AND CONTAINS CONFIDENTIAL AND TRADE SECRET INFORMATION. THIS SHEET MAY NOT BE TRANSFERED FROM THE CUSTODY OF THE COMPETENT DIVISION OF R&D DEPARTMENT EXCEPT AS AUTHORIZED BY COMPAL ELECTRONICS, INC. NEITHER THIS SHEET NOR THE INFORMATION IT CONTAINS MAY BE USED BY OR DISCLOSED TO ANY THIRD PARTY WITHOUT PRIOR WRITTEN CONSENT OF COMPAL ELECTRONICS, INC.

Compal Electronics, Inc.

Title: 3VALWP/5VALWP

Size: Custom | Document Number: Zx90 | Rev: 0.1

Date: Wednesday, January 09, 2013 | Sheet 50 of 62

WWW.AliSaler.Com

STATE	S3	S5	1.5VP	VTT_REFP	0.75VSP
S0	Hi	Hi	On	On	On
S3	Lo	Hi	On	On	Off (Hi-Z)
S4/S5	Lo	Lo	Off	Off	Off
Note: S3 - sleep ; S5 - power off					

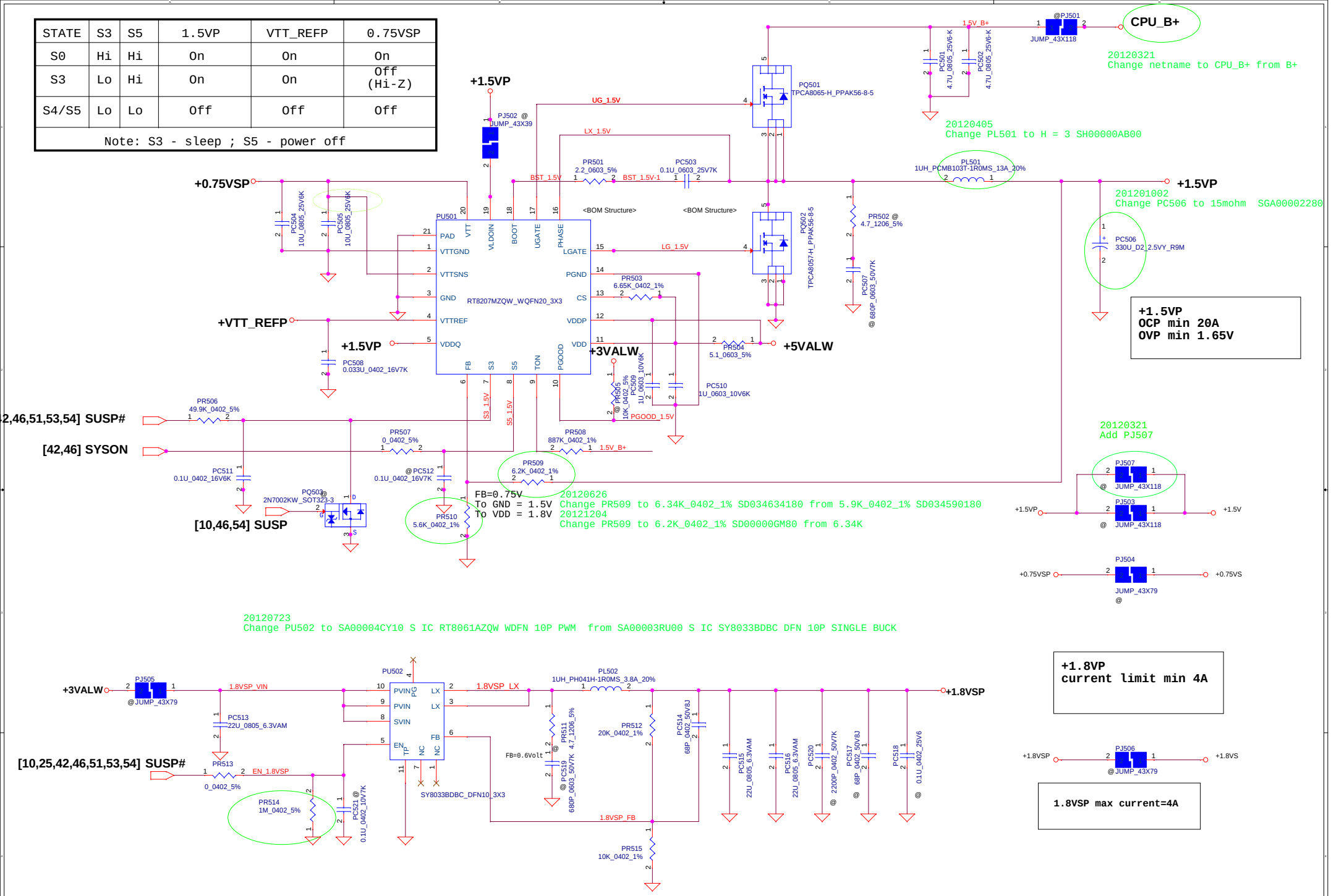

Security Classification	Compal Secret Data		
Issued Date	2010/01/25	Deciphered Date	2012/07/11

THIS SHEET OF ENGINEERING DRAWING IS THE PROPRIETARY PROPERTY OF COMPAL ELECTRONICS, INC. AND CONTAINS CONFIDENTIAL AND TRADE SECRET INFORMATION. THIS SHEET MAY NOT BE TRANSFERED FROM THE CUSTODY OF THE COMPETENT DIVISION OF R&D DEPARTMENT EXCEPT AS AUTHORIZED BY COMPAL ELECTRONICS, INC. NEITHER THIS SHEET NOR THE INFORMATION IT CONTAINS MAY BE USED BY OR DISCLOSED TO ANY THIRD PARTY WITHOUT PRIOR WRITTEN CONSENT OF COMPAL ELECTRONICS, INC.

Compal Electronics, Inc.

Title: +1.5VP/+1.8VSP

Size: Custom | Document Number: Zx90 | Rev: 0.1

Date: Thursday, January 10, 2013 | Sheet 51 of 62

WWW.AliSaler.Com

VID [0]	VID[1]	VCCSA Vout
0	0	0.9V
0	1	0.8V
1	0	0.725V
1	1	0.675V

output voltage adjustable network

+VCC_SAP
TDC 4.2A
Peak Current 6A
OCP current 7.2A
OVP 1.06V

The 1k PD on the VCCSA VIDs are empty. These should be stuffed to ensure that VCCSA VID is 00 prior to VCCIO stability.

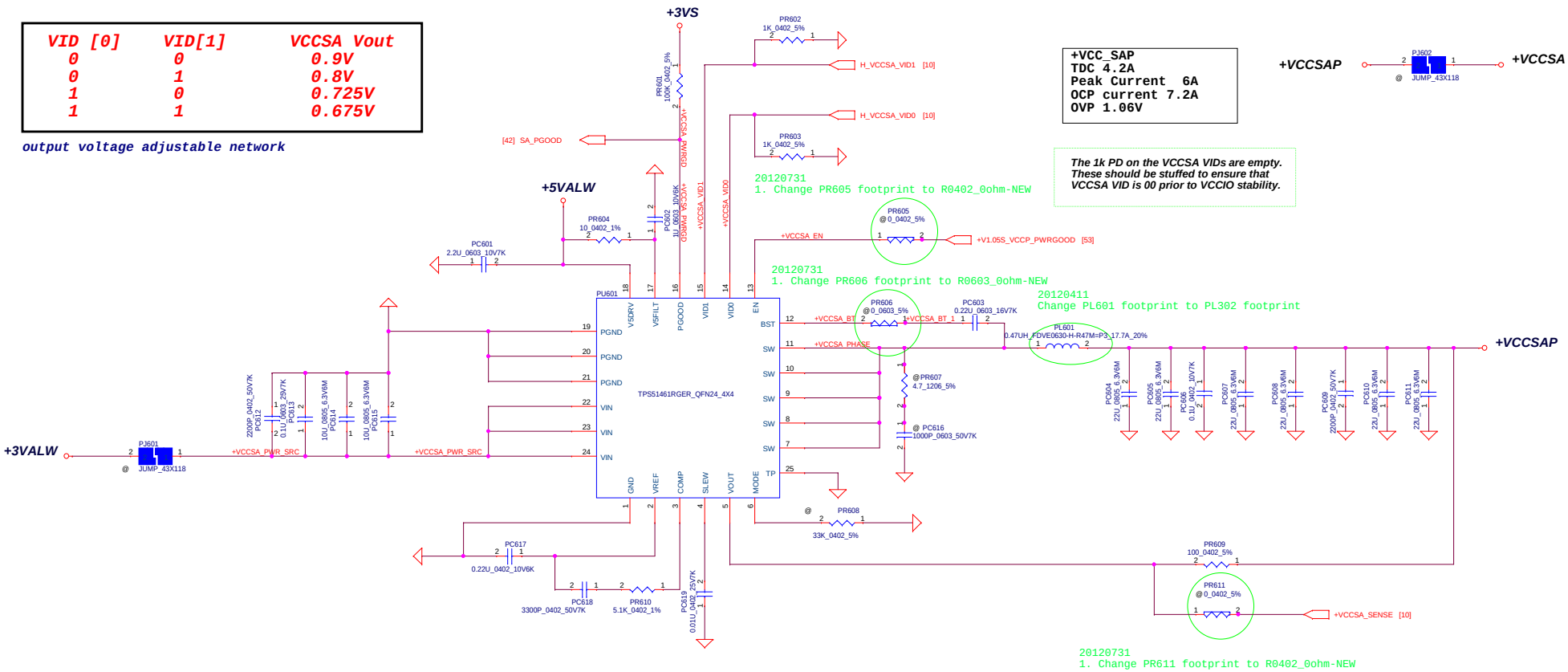

20120731
1. Change PR611 footprint to R0402_0ohm-NEW

Security Classification	Compal Secret Data		
Issued Date	2010/01/25	Deciphered Date	2012/07/11

THIS SHEET OF ENGINEERING DRAWING IS THE PROPRIETARY PROPERTY OF COMPAL ELECTRONICS, INC. AND CONTAINS CONFIDENTIAL AND TRADE SECRET INFORMATION. THIS SHEET MAY NOT BE TRANSFERED FROM THE CUSTODY OF THE COMPETENT DIVISION OF R&D DEPARTMENT EXCEPT AS AUTHORIZED BY COMPAL ELECTRONICS, INC. NEITHER THIS SHEET NOR THE INFORMATION IT CONTAINS MAY BE USED BY OR DISCLOSED TO ANY THIRD PARTY WITHOUT PRIOR WRITTEN CONSENT OF COMPAL ELECTRONICS, INC.

Compal Electronics, Inc.

Title: +VCCSAP

Size: C | Document Number: Zx90 | Rev: 0.1

Date: Wednesday, January 09, 2013 | Sheet 52 of 62

WWW.AliSaler.Com

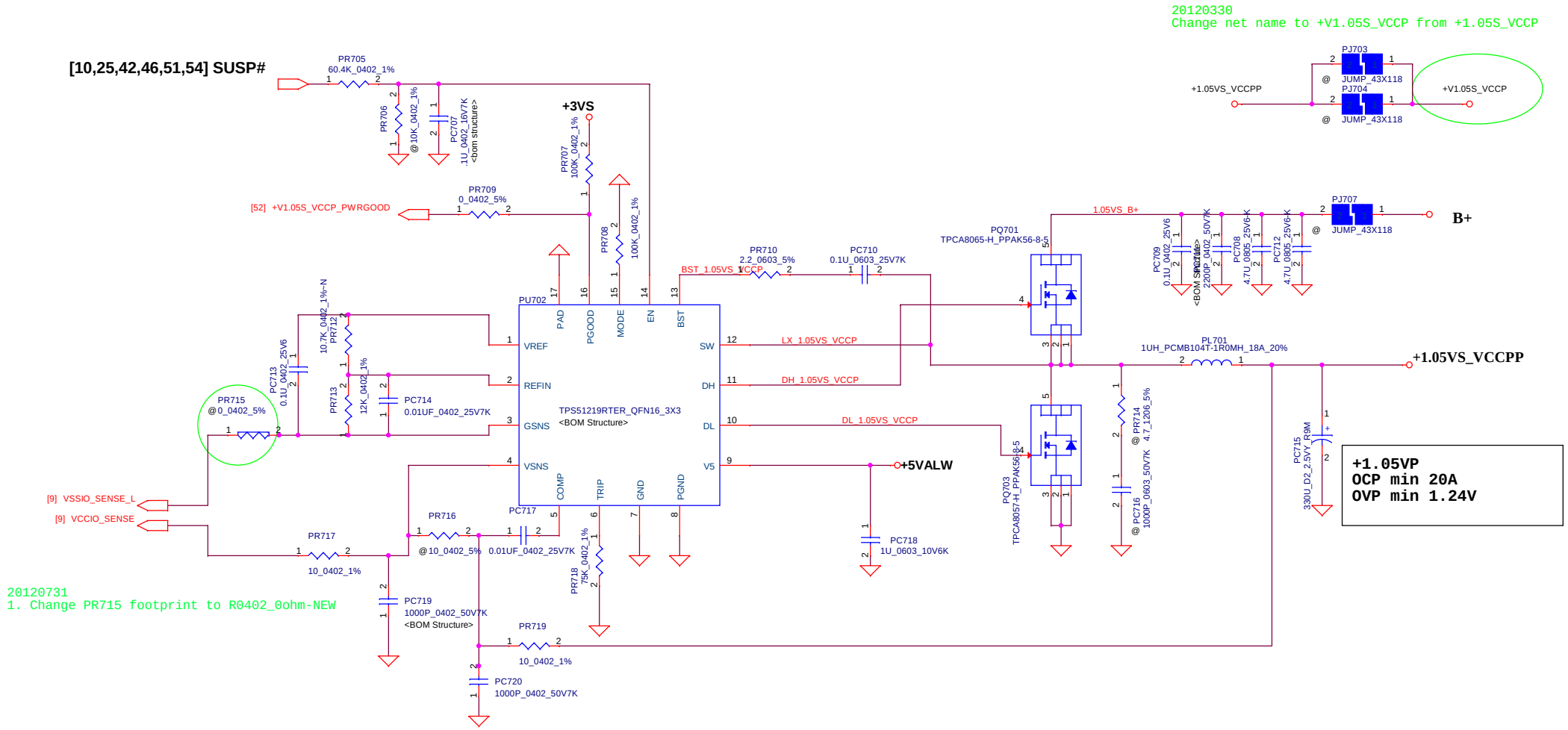

Security Classification	Compal Secret Data		
Issued Date	2010/01/25	Deciphered Date	2012/07/11

THIS SHEET OF ENGINEERING DRAWING IS THE PROPRIETARY PROPERTY OF COMPAL ELECTRONICS, INC. AND CONTAINS CONFIDENTIAL AND TRADE SECRET INFORMATION. THIS SHEET MAY NOT BE TRANSFERED FROM THE CUSTODY OF THE COMPETENT DIVISION OF R&D DEPARTMENT EXCEPT AS AUTHORIZED BY COMPAL ELECTRONICS, INC. NEITHER THIS SHEET NOR THE INFORMATION IT CONTAINS MAY BE USED BY OR DISCLOSED TO ANY THIRD PARTY WITHOUT PRIOR WRITTEN CONSENT OF COMPAL ELECTRONICS, INC.

Compal Electronics, Inc.

Title: +1.05VS_VCCP

Size: Custom | Document Number: Zx90 | Rev: 0.1

Date: Wednesday, January 09, 2013 | Sheet 53 of 62

WWW.AliSaler.Com

20121015
1.Change PR816 from SD028100380 S RES 1/16W 100K +-5% 0402 to SD028100180 S RES 1/16W 1K +-5% 0402

2.Change PQ803 from NA to SB000009Q80 S TR 2N7002KW 1N SOT323-3

3.Change PR813 from NA to SD000001R80 S RES 1/10W 22 +-5% 0603

4.Change PR815 from NA to SD028000080 S RES 1/16W 0 +-5% 0402

20120405
Change PQ802 and PJ802 netname to +V1.05S_VCCP from +1.05VS

20120926
1. Add PC871 for reserve

20120919
1. Change PQ810 gnd net name to gnd from GPU_FBRTN

2phase --> PSI > 2.4V
1phase --> PSI < 0.8V
HW pull high

Change PR842 to 12K from 8.6K

+VGA_COREP
OCP min 60A
OVP min 1.525V

20120919
1. Del PC847,PC844,PC850,PC851 0.1u_0402_10V7K
2.Add PC828,PC855,PC862,PC863,PC868,PC869 22u_0805_6.3V6M
20121026
Del PC823,PC825,PC828,PC855,PC862,PC869 SE000000I10 S CER CAP 22UF 6.3V M X5

20121023
1.Change PR807 to 0ohm SD028000080 from 100ohm SD028100080

+VGA_CORE Under VGA Core

+VGA_CORE Near VGA Core

Security Classification	Compal Secret Data		
Issued Date	2008/09/15	Deciphered Date	2012/07/11

THIS SHEET OF ENGINEERING DRAWING IS THE PROPRIETARY PROPERTY OF COMPAL ELECTRONICS, INC. AND CONTAINS CONFIDENTIAL AND TRADE SECRET INFORMATION. THIS SHEET MAY NOT BE TRANSFERED FROM THE CUSTODY OF THE COMPETENT DIVISION OF R&D DEPARTMENT EXCEPT AS AUTHORIZED BY COMPAL ELECTRONICS, INC. NEITHER THIS SHEET NOR THE INFORMATION IT CONTAINS MAY BE USED BY OR DISCLOSED TO ANY THIRD PARTY WITHOUT PRIOR WRITTEN CONSENT OF COMPAL ELECTRONICS, INC.

Compal Electronics, Inc.

Title: VGA_COREP

Size: | Document Number: LA-9601P | Rev: 0.1

Date: Wednesday, January 09, 2013 | Sheet 54 of 62

WWW.AliSaler.Com

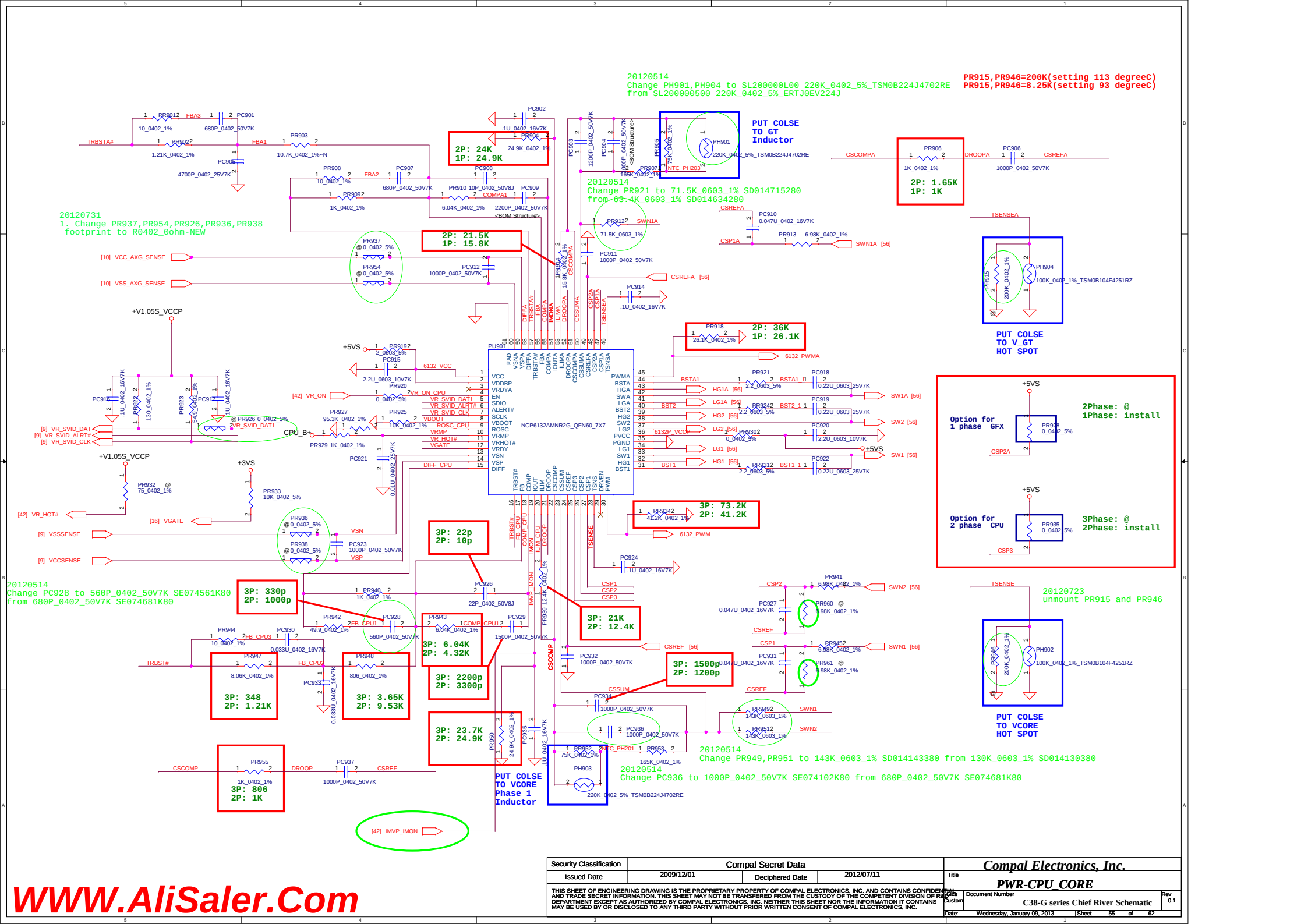
20120514
Change PH901,PH904 to SL200000L00 220K_0402_5%_TSM0B224J4702RE
from SL200000500 220K_0402_5%_ERTJ0EV224J
PR915,PR946=200K(setting 113 degreeC)
PR915,PR946=8.25K(setting 93 degreeC)
PUT COLSE TO GT Inductor
2P: 24K
1P: 24.9K
2P: 1.65K
1P: 1K
20120514
Change PR921 to 71.5K_0603_1% SD014715280
from 63.4K_0603_1% SD014634280
20120731
1. Change PR937,PR954,PR926,PR936,PR938
footprint to R0402_0ohm-NEW
2P: 21.5K
1P: 15.8K
2P: 36K
1P: 26.1K
PUT COLSE TO V_GT HOT SPOT
2Phase: @
1Phase: install
Option for 1 phase GFX
Option for 2 phase CPU
3Phase: @
2Phase: install
3P: 73.2K
2P: 41.2K
3P: 22p
2P: 10p
20120514
Change PC928 to 560P_0402_50V7K SE074561K80
from 680P_0402_50V7K SE074681K80
3P: 330p
2P: 1000p
3P: 21K
2P: 12.4K
20120723
unmount PR915 and PR946
3P: 6.04K
2P: 4.32K
3P: 1500p
2P: 1200p
3P: 2200p
2P: 3300p
3P: 348
2P: 1.21K
3P: 3.65K
2P: 9.53K
3P: 23.7K
2P: 24.9K
PUT COLSE TO VCORE Phase 1 Inductor
PUT COLSE TO VCORE HOT SPOT
3P: 806
2P: 1K
20120514
Change PR949,PR951 to 143K_0603_1% SD014143380 from 130K_0603_1% SD014130380
20120514
Change PC936 to 1000P_0402_50V7K SE074102K80 from 680P_0402_50V7K SE074681K80
NCP6132AMNR2G_QFN60_7X7
Security Classification
Compal Secret Data
Issued Date
2009/12/01
Deciphered Date
2012/07/11
Compal Electronics, Inc.
Title
PWR-CPU_CORE
Size
Custom
Document Number
C38-G series Chief River Schematic
Rev
0.1
Date:
Wednesday, January 09, 2013
Sheet
55
of
62
THIS SHEET OF ENGINEERING DRAWING IS THE PROPRIETARY PROPERTY OF COMPAL ELECTRONICS, INC. AND CONTAINS CONFIDENTIAL AND TRADE SECRET INFORMATION. THIS SHEET MAY NOT BE TRANSFERED FROM THE CUSTODY OF THE COMPETENT DIVISION OF R&D DEPARTMENT EXCEPT AS AUTHORIZED BY COMPAL ELECTRONICS, INC. NEITHER THIS SHEET NOR THE INFORMATION IT CONTAINS MAY BE USED BY OR DISCLOSED TO ANY THIRD PARTY WITHOUT PRIOR WRITTEN CONSENT OF COMPAL ELECTRONICS, INC.
WWW.AliSaler.Com

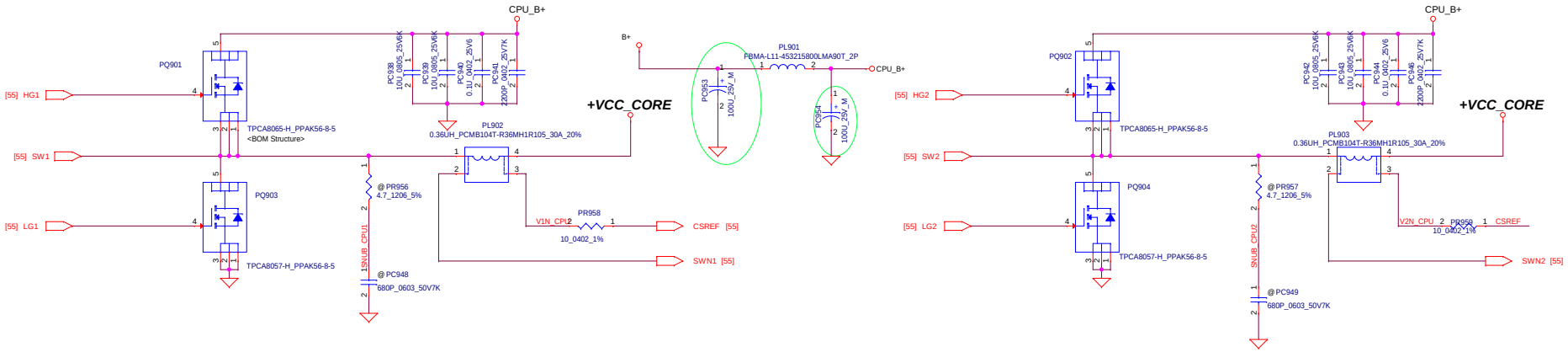

DC 35W CPU
VID1=1.05V
IccMax=53A
Icc_Dyn=43A
Icc_TDC=36A
R_LL=1.9m ohm
OCP~65A

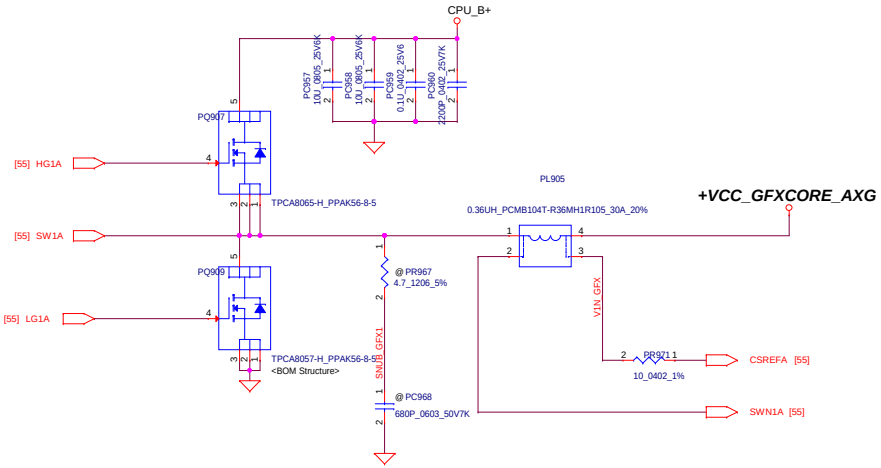

DC 35W GT2
VID1=1.23V
IccMax=33A
Icc_Dyn=20.2A
Icc_TDC=21.5A
R_LL=3.9m ohm
OCP~40A

Security Classification	Compal Secret Data		
Issued Date	2009/12/01	Deciphered Date	2012/07/11

THIS SHEET OF ENGINEERING DRAWING IS THE PROPRIETARY PROPERTY OF COMPAL ELECTRONICS, INC. AND CONTAINS CONFIDENTIAL AND TRADE SECRET INFORMATION. THIS SHEET MAY NOT BE TRANSFERED FROM THE CUSTODY OF THE COMPETENT DIVISION OF R&D DEPARTMENT EXCEPT AS AUTHORIZED BY COMPAL ELECTRONICS, INC. NEITHER THIS SHEET NOR THE INFORMATION IT CONTAINS MAY BE USED BY OR DISCLOSED TO ANY THIRD PARTY WITHOUT PRIOR WRITTEN CONSENT OF COMPAL ELECTRONICS, INC.

Compal Electronics, Inc.

Title: **PWR-CPU_CORE**

Size: C | Document Number: C38-G series Chief River Schematic | Rev: 0.1

Date: Wednesday, January 09, 2013 | Sheet 56 of 62

WWW.AliSaler.Com

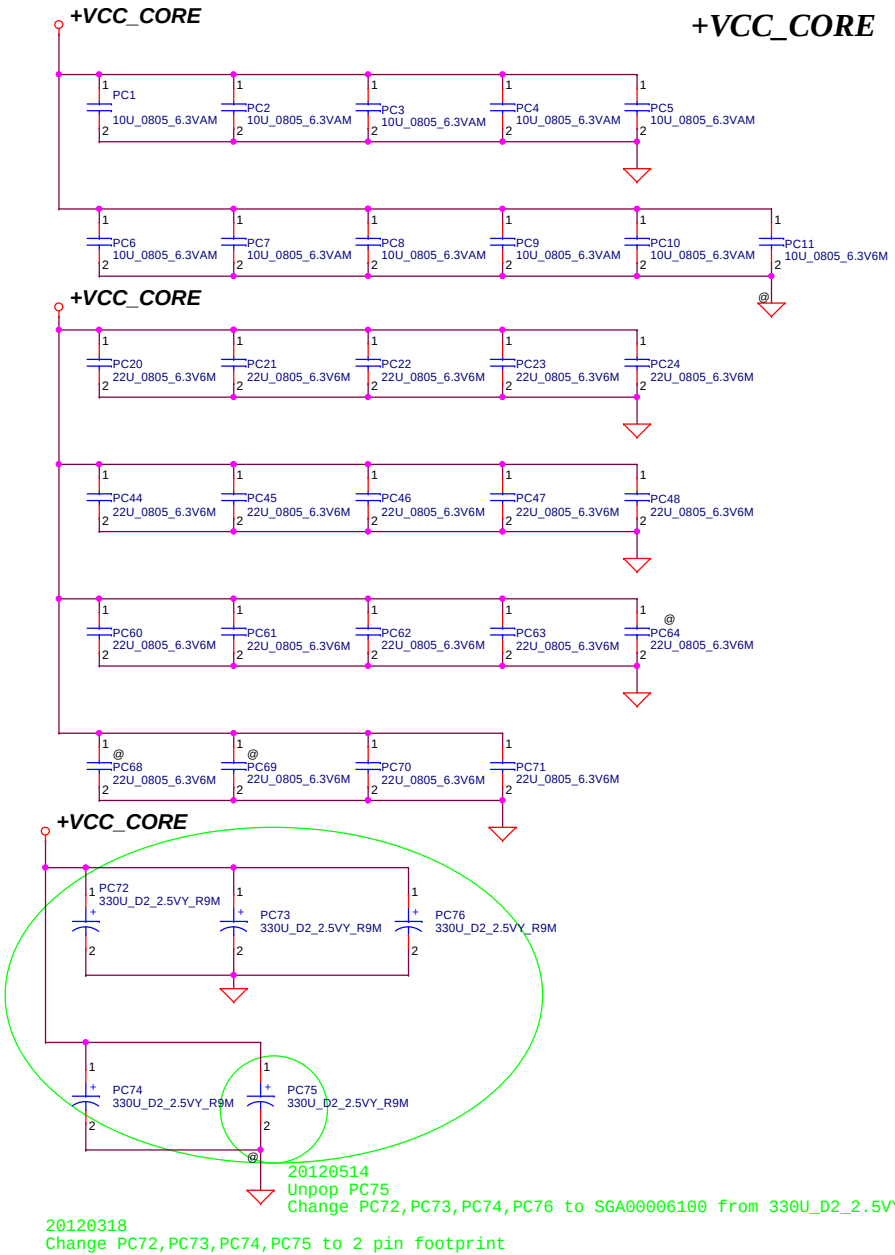

20120514
Unpop PC75
Change PC72,PC73,PC74,PC76 to SGA00006100 from 330U_D2_2.5VY_R9M SGA00002680

20120318
Change PC72,PC73,PC74,PC75 to 2 pin footprint

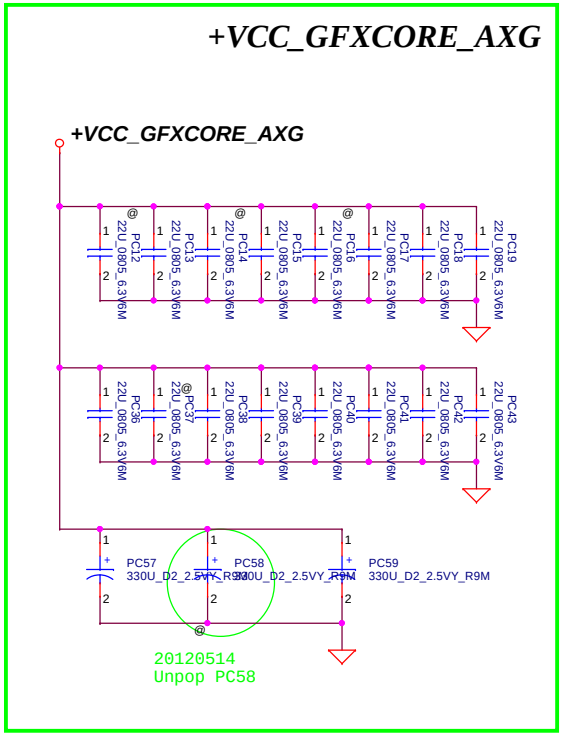

20120514
Unpop PC58

Below is 458544_CRV_PDDG_0.5 Table 5-8.

Socket Bottom	5 x 22 µF (0805) 5 x (0805) no-stuff sites
Socket Top	7 x 22 µF (0805) 2 x (0805) no-stuff sites

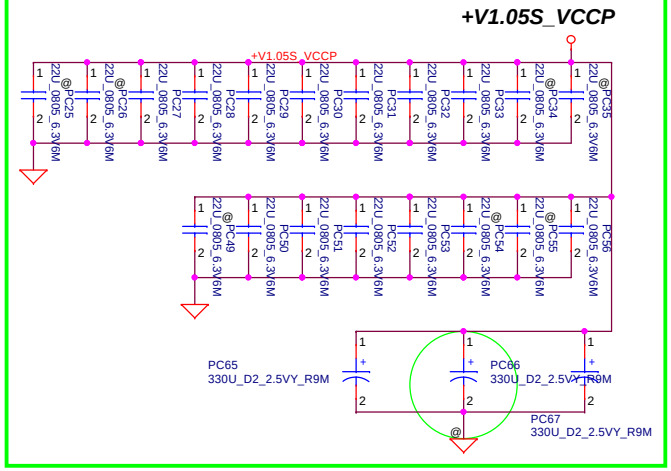

20120514
Unpop PC66

Security Classification	Compal Secret Data		
Issued Date	2008/09/15	Deciphered Date	2012/07/11

THIS SHEET OF ENGINEERING DRAWING IS THE PROPRIETARY PROPERTY OF COMPAL ELECTRONICS, INC. AND CONTAINS CONFIDENTIAL AND TRADE SECRET INFORMATION. THIS SHEET MAY NOT BE TRANSFERED FROM THE CUSTODY OF THE COMPETENT DIVISION OF R&D DEPARTMENT EXCEPT AS AUTHORIZED BY COMPAL ELECTRONICS, INC. NEITHER THIS SHEET NOR THE INFORMATION IT CONTAINS MAY BE USED BY OR DISCLOSED TO ANY THIRD PARTY WITHOUT PRIOR WRITTEN CONSENT OF COMPAL ELECTRONICS, INC.

Compal Electronics, Inc.

Title: PWR - PROCESSOR DECOUPLING

Size | Document Number: LA-9601P | Rev: 0.1

Date: Wednesday, January 09, 2013 | Sheet 57 of 62

WWW.AliSaler.Com

Version change list (P.I.R. List)

Item	Reason for change	PG#	Modify List	Date	Phase
1	For EC net name	P48	PR206 change pull high voltage to +EC_VCCA from +3VLP	20120316	EVT
2	Intersil advise	P54	1.Change PR848 to 1.47K SD000009480 from 1.15K 2.Unmount PC864	20120316	EVT
3	VGA IMON setting	P54	Change PR853 to 11K SD034110280 from 11.3K	20120316	EVT
4	set OCP is 56A	P54	Change PR869 to 1.58K (SD00000SJ80) from 1K	20120316	EVT
5	For 1.5V current	P51	Add PJ507 for 1.5V	20120321	EVT
6	For B+ layout	P55 P50 P51 P50	1.Change PC954 pull high to CPU_B+ from B+ 2.Change 3/5VALWP B+ input netname to CPU_B+ 3.Change 1.5VALWP B+ input netname to CPU_B+ 4.Change PR411 netname to CPU_B+ from B+	20120321	EVT
7	For HW net name	P53 P54	1.Change +1.05S_VCCP netname to +V1.05S_VCCP 2.Change PQ802.5 netname to +V1.05S_VCCP from +1.05VS	20120330	EVT
8	For HW power sequence	P54	1.Add control PU801 pin GPU_PWR_EN and reserve PR956 0_0402_5% 2.Change PR820 to SD034150380 150K_0402_1% from 100K 3.Change PC810 to SE071101J80 100P_0402_50V8J from 0.1u	20120330	EVT
9	For Intersil advise	P54	Change PR853 pull down netname to gnd	20120409	EVT
10	For IMON design	P55	Change PU901 to NCP6132A from ISL95836	20120412	EVT
11	For layout design	P54	1.Del PJ803 PJ804 2.Change net name to VGACORE from VGACOREP	20120511	DVT
12	For 1.05V, GFX_CORE,CPU_CORE design fine tune	P57	Unpop PC58, PC66,PC75 330U_D2_2.5VY_R9M SGA00002680	20120514	DVT
13	For CPU_CORE design fine tune and ON advise	P57	Change PC72,PC73,PC74,PC76 to S POLY C 330U 2V M D2 ESR9M SGA00006100 from 330U_D2_2.5VY_R9M SGA00002680	20120514	DVT
14	For CPU_CORE design fine tune and ON advise	P55	1.Change PC928 to 560P_0402_50V7K SE074561K80 from 680P_0402_50V7K SE074681K80 2.Change PR949,PR951 to 140K from 130K 3.Change PR912 to 71.5K_0603_1% SD014715280 from 63.4K_0603_1% SD014634280 4.Change PH901,PH904 to SL200000L00 220K_0402_5%_TSM0B224J4702RE from SL200000500 220K_0402_5%_ERTJ0EV224J	20120514	DVT
15	For material EOL	P55	Change PH901,PH904 to SL200000L00 220K_0402_5%_TSM0B224J4702RE from SL200000500 220K_0402_5%_ERTJ0EV224J	20120514	DVT
16	For HW VGA power sequence	P54	Add PR972 SD028000080 0_0402_5% Unmount PD801 Change PR820 to 0_0402_5% SD028000080 from 150K_0402_1% SD034150380 Unmount PC810	20120516	DVT

WWW.AliSaler.Com

THIS SHEET OF ENGINEERING DRAWING IS THE PROPRIETARY PROPERTY OF COMPAL ELECTRONICS, INC. AND CONTAINS CONFIDENTIAL AND TRADE SECRET INFORMATION. THIS SHEET MAY NOT BE TRANSFERED FROM THE CUSTODY OF THE COMPETENT DIVISION OF R&D DEPARTMENT EXCEPT AS AUTHORIZED BY COMPAL ELECTRONICS, INC. NEITHER THIS SHEET NOR THE INFORMATION IT CONTAINS MAY BE USED BY OR DISCLOSED TO ANY THIRD PARTY WITHOUT PRIOR WRITTEN CONSENT OF COMPAL ELECTRONICS, INC.

Security Classification	Compal Secret Data		
Issued Date	2009/01/06	Deciphered Date	2012/07/11

Compal Electronics, Inc.

Title: PIR (PWR)

Size: Custom | Document Number: Zx90 | Rev: 0.1

Date: Wednesday, January 09, 2013 | Sheet 58 of 62

Version change list (P.I.R. List)

Item	Reason for change	PG#	Modify List	Date	Phase
17	For HW reset function	P50	1.Add PR420 SD028000080 0_0402_5% for reserve 2 reserve.PR419 and PR420	20120606	PVT
18	For ACDET function	P49	1.Change PR313 to 60.4K_0603_1% SD014604280 from 64.9K_0603_1% SD014649280	20120615	PVT
19	For HW Grenn clock UMA sku trial tun	P47	1. unmount PD103 2. Change PR108 to 150_0603_5% SD013150080 from 560_0603_5% SD013560080 Change PR109 to 1K_0603_5% SD013100180 from 560_0603_5% SD013560080	20120625	PVT
20	For ACDET function	P49	1.Change PR313 to 59K_0603_1% SD014590280 from 60.4K_0603_1% SD014604280	20120705	PVT
21	For VR_HOT	P55	1.unmount PR915 and PR946	20120705	PVT
22	For HW Grenn clock	P47	1. mount PD103 2. Change PR108 to 150_0603_5% SD013150080 from 560_0603_5% SD013560080 Change PR109 to 1K_0603_5% SD013100180 from 560_0603_5% SD013560080	20120723	SVT
23	For material issue	P51	1.Change PU502 to SA00004CY10 S IC RT8061AZQW WDFN 10P PWM from SA00003RU00 S IC SY8033BDBC DFN 10P SINGLE BUCK	20120723	SVT

WWW.AliSaler.Com

COMPAL CONFIDENTIAL

MODEL NAME: *Power Sequence Block Diagram*
PCB NAME: *LA-7981P*
REVISION:
DATE: *2011/07/13*

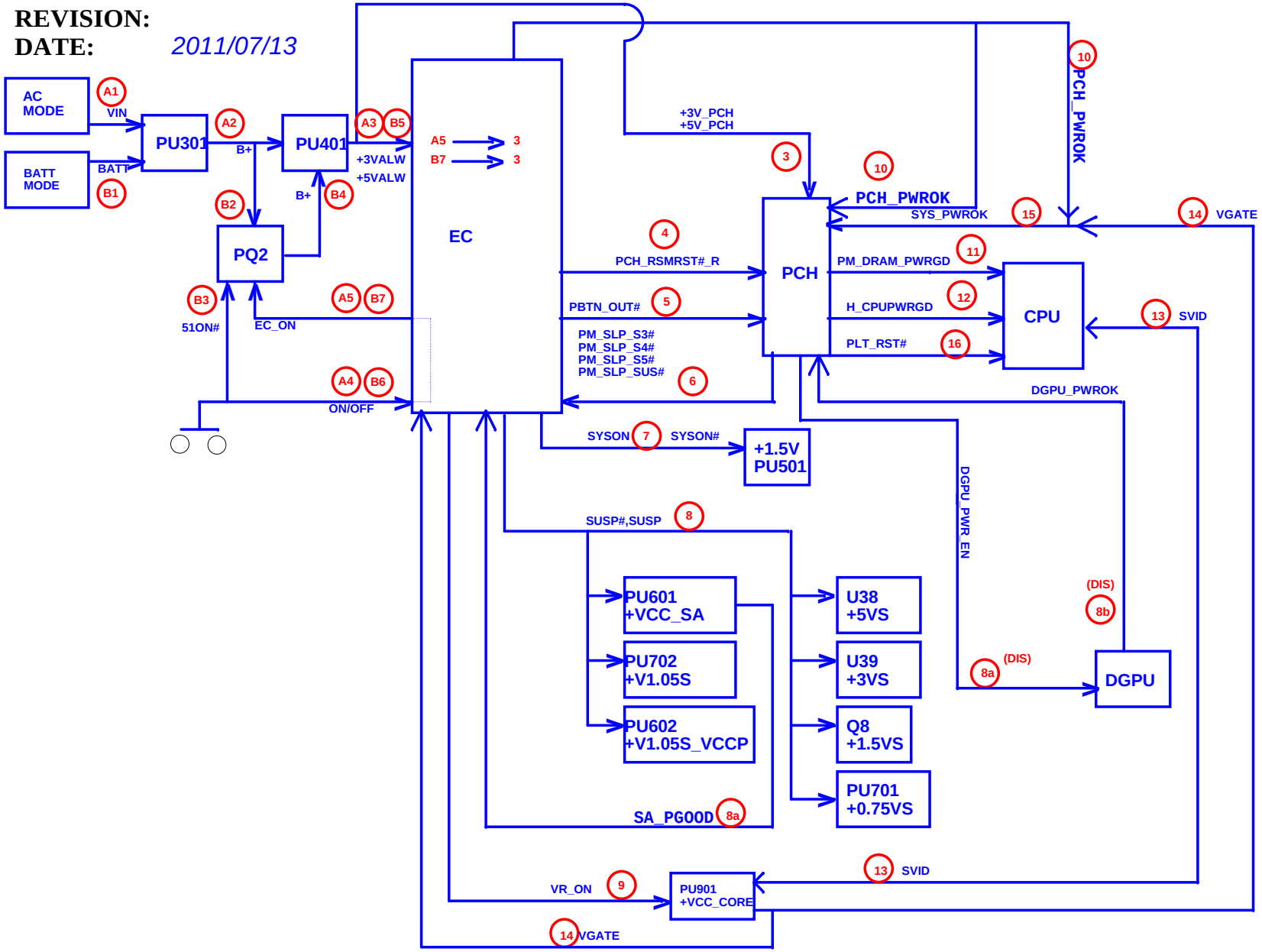

Security Classification	Compal Secret Data			Compal Electronics, Inc.
Issued Date	2012/12/26	Deciphered Date	2012/07/11	Title: Power sequence
				Size: Custom; Document Number: LA-9603P; Rev: 1.0
				Date: Wednesday, January 09, 2013; Sheet 60 of 62

THIS SHEET OF ENGINEERING DRAWING IS THE PROPRIETARY PROPERTY OF COMPAL ELECTRONICS, INC. AND CONTAINS CONFIDENTIAL AND TRADE SECRET INFORMATION. THIS SHEET MAY NOT BE TRANSFERED FROM THE CUSTODY OF THE COMPETENT DIVISION OF R&D DEPARTMENT EXCEPT AS AUTHORIZED BY COMPAL ELECTRONICS, INC. NEITHER THIS SHEET NOR THE INFORMATION IT CONTAINS MAY BE USED BY OR DISCLOSED TO ANY THIRD PARTY WITHOUT PRIOR WRITTEN CONSENT OF COMPAL ELECTRONICS, INC.

WWW.AliSaler.Com

Version change list (P.I.R. List)

Item	Reason for change	PG#	Modify List	Date	Phase
1	Initial				EVT
2	For LVDS blacklight PWM	P33	R431 change from 0ohm_short to 0ohm mount	5/7	EVT
3	For Change Audio Woofer MOSFET from Dual to single channel	P15	Changer Part from SB00000EO10 to SB00000EN00	5/7	EVT
4	For OVERT# Glitch issue at Power on status	P23	Add QV9	5/7	EVT
5	For BT&WLAN Combo Card	P36	to modify R897 value from 0 ohm to 1K ohm add BT_DISABLE_F_R on JWLN1.51 add R5580	5/8	DVT
6	For Factory request and cost down LVDS PIN Define	P33	To Modify LVDS PIN Define	5/8	DVT
7	For USB Charger mode control request	P45 P42	To Add PWRSHARE_EN_R on U31.38 To Add EC_PWRSHARE_EN# on U31.74 add R5577 and R5578, delete CHG_ON#	5/8	DVT
8	To change Reset IC G601	P42	to change R4959 value from 200K ohm to 0 ohm add R5579 0 ohm	5/8	DVT
9	Reserved Touch Screen Power Control	P42 P43	add R5581,C1331,R5572,R5583,R5584 and Q156 add EC_TS_ON on U31.66 add +3VS_TS,+3VS_TS_R	5/8	DVT
10	To change Speaker PIN define for ME routing request	P41	SPK_L2+ R1556 net in JSPK1.1 SPK_L1- R1554 net in JSPK1.2 SPK_R1- R1555 net in JSPK1.3 SPK_R2+ R1553 net in JSPK1.4	5/8	DVT
11	for Realtek Vendor recommand	P41	R1123,C1134 close to U50.47 R5582,R1559 and C1135 Close to U73.1 EXT_MIC_R	5/8	DVT
12	for ME request	P39	To Modify H21,H7,H18 PCB Footprint as below H21 from H_3P3 to H_4P6 H7 from H_2P8 to H_3P0 H18 from H_3P3 to H_3P9N	5/8	DVT
13	for LAN Clock be better	P37	change C990 value from 5PF to 0 ohm.	5/9	DVT
14	for Audio Vendor recommand	P43	change JUSB3.11 from GND to +3VS change JUSB3.12 from +3VS to AGND	5/10	DVT
15	for Crystal finetune Capacitor	P43	C180,C181 from 18PF to 12PF	5/16	DVT
16	for DVT Board ID request	P42	R695 from 33K to 18K	5/17	DVT
17	for PVT request	P37	Change Reference from C990 to R5585	5/23	PVT
18	for Surge request	P38	C1325,C1326,C1327 change package from 0402 to 0603	5/23	PVT
19	for Reset IC function	P42, P50,P43	add R612,PR420,R4960,R4961 Delete R4959	5/24	PVT

THIS SHEET OF ENGINEERING DRAWING IS THE PROPRIETARY PROPERTY OF COMPAL ELECTRONICS, INC. AND CONTAINS CONFIDENTIAL AND TRADE SECRET INFORMATION. THIS SHEET MAY NOT BE TRANSFERED FROM THE CUSTODY OF THE COMPETENT DIVISION OF R&D DEPARTMENT EXCEPT AS AUTHORIZED BY COMPAL ELECTRONICS, INC. NEITHER THIS SHEET NOR THE INFORMATION IT CONTAINS MAY BE USED BY OR DISCLOSED TO ANY THIRD PARTY WITHOUT PRIOR WRITTEN CONSENT OF COMPAL ELECTRONICS, INC.

WWW.AliSaler.Com

Version change list (P.I.R. List)

Item	Reason for change	PG#	Modify List	Date	Phase
20	modify N14P_GV2 GPU power sequence	P18 P46 P46	Remove R5575,connect DGPU_PWR_EN to U31.pin89 Add diode D60;D61 add discharge(Q157) for DGPU_PWR_EN	11/13	PVT
21	for GC6 function	P23	Change RV54 from 10K to 100k	11/29	PVT
22	for GC6 function	P46	Add a 0 ohm R5597 between Q129 pin 2 and Q130 pin	12/26	Pre-MP
23	due to they are cap not resistor.	P46	R1108,R1112 location change to C1108,C1112	12/26	Pre-MP

Security Classification	Compal Secret Data		
Issued Date	2012/12/26	Deciphered Date	2012/07/11

THIS SHEET OF ENGINEERING DRAWING IS THE PROPRIETARY PROPERTY OF COMPAL ELECTRONICS, INC. AND CONTAINS CONFIDENTIAL AND TRADE SECRET INFORMATION. THIS SHEET MAY NOT BE TRANSFERED FROM THE CUSTODY OF THE COMPETENT DIVISION OF R&D DEPARTMENT EXCEPT AS AUTHORIZED BY COMPAL ELECTRONICS, INC. NEITHER THIS SHEET NOR THE INFORMATION IT CONTAINS MAY BE USED BY OR DISCLOSED TO ANY THIRD PARTY WITHOUT PRIOR WRITTEN CONSENT OF COMPAL ELECTRONICS, INC.

Compal Electronics, Inc.

Title: HW-PIR1

Size: Custom | Document Number: LA-9603P | Rev: 1.0

Date: Wednesday, January 09, 2013 | Sheet 62 of 62

WWW.AliSaler.Com